Excel Flat Shutter LJ6C for Keystone Jack Black

Part Code: 100-018-BK

sales@excel-networking.com
excel-networking.com



Main Features

/ Fits industry standard LJ6C apertures
/ Compatible with a range of faceplates
/ Available in black/white
/ Labelling field

Product Overview

A range of mounting options are available for the Excel Keystone Tool‐less Jacks that allow them to be installed in a number of situations. This flexibility results in the ability to have the same jacks terminating the cable in the patch panel and at the outlet.

These shutters are available in the LJ6C size of 22.5 x 37 mm. They come with windows and labels fitted to complete the installation.

Product Specifications

Feature	Values

This data sheet was generated at 1:13am 25th November 2026 and is subject to change at any time.

Excel Flat Shutter LJ6C for Keystone Jack Black

Part Code: 100-018-BK

sales@excel-networking.com
excel-networking.com

Application	**Mounting cover data connector**
Material	**Plastic**
Colour	**Black**
RAL-number (akin)	**9011**
Type of fastening	**Engage (snap)**
Width of device	**22 mm**
Height of device	**37 mm**

This data sheet was generated at 1:13am 25th November 2026 and is subject to change at any time.

sales@excel-networking.com
excel-networking.com

Product drawing

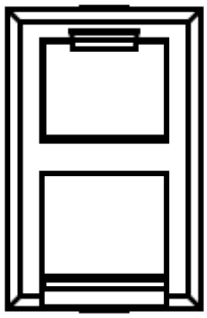

100-018, 100-018-BK

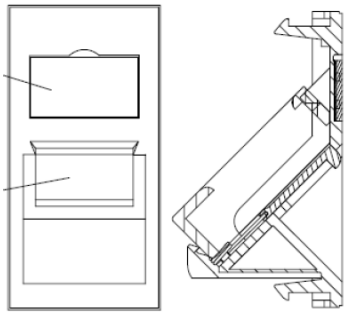

100-175, 100-175-BK

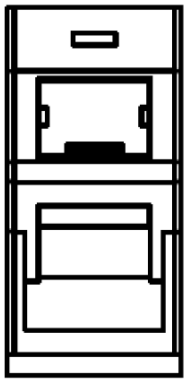

100-020, 100-020-BK

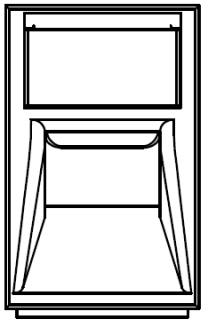

100-022, 100-022-BK

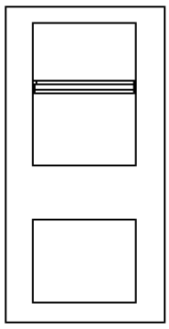

100-014

Standards

Applicable standard	Detail
BSEN 60670-1:2005 + A1:2013	Boxes and enclosures for electrical accessories for household and similar fixed electrical installations general requirements

This data sheet was generated at 1:13am 25th November 2026 and is subject to change at any time.

BSEN 61340-5-1:2007	Protection of electronic devices from electrostatic phenomena.General requirements apply to activities that: manufacture, process, assemble, install, package, label, service, test, inspect, transport or otherwise handle electrical or electronic parts, assemblies and equipment susceptible to damage by electrostatic discharges greater than or equal to 100 V human body model (HBM).
BSEN 60529:1992+A2:2013	Degrees of Protection provided by Enclosures (IP CODE)
Directive 2011/65/EU (RoHS II)	Restriction of the Use of Certain Hazardous Substances in Electrical and Electronic Equipment — compliant. Applies within EU member states).
Directive (EU) 2015/863 (RoHS III)	Amending Directive 2011/65/EU to add four phthalates (DEHP, BBP, DBP, DIBP) to Annex II — compliant.
Directive 2008/98/EC (WFD)	Waste Framework Directive — compliant. Implemented in the UK through the Waste (England and Wales) Regulations 2011 (SI 2011 No. 988).
ECHA SCIP Database	Compliant; product does not contain SVHCs (Substances of Very High Concern) as defined under REACH Article 33(1). Submission obligations met under EU REACH and UK REACH.
Regulation (EU) 2019/1021 (POPs)	EU Regulation on Persistent Organic Pollutants — compliant. For Great Britain, compliance is aligned with the Persistent Organic Pollutants (Amendment) (EU Exit) Regulations 2020 (SI 2020 No. 1355).
UK SI 2012 No. 3032	The Restriction of the Use of Certain Hazardous Substances in Electrical and Electronic Equipment Regulations 2012 (UK RoHS) — compliant for Great Britain. Retained EU law, as amended by the Product Safety and Metrology (Amendment etc.) (EU Exit) Regulations 2019.

Part Code Table

Part Code	Description
100-014	**Excel Plus Flat Shutter For Keystone Jack 25 x 50 mm White**

This data sheet was generated at 1:13am 25th November 2026 and is subject to change at any time.

sales@excel-networking.com
excel-networking.com

100-014-BK	**Excel Plus Flat Shutter For Keystone Jack 25 x 50 mm Black**
100-018	**Excel Flat Shutter LJ6C for Keystone Jack White**
100-018-BK	**Excel Flat Shutter LJ6C for Keystone Jack Black**
100-020	**Excel Angled Shutter For Keystone Jack 25 x 50 mm White**
100-020-BK	**Excel Angled Shutter For Keystone Jack 25 x 50 mm Black**
100-022	**Excel Angled Shutter LJ6C for Keystone Jack White**
100-022-BK	**Excel Angled Shutter LJ6C for Keystone Jack Black**
100-022-BU	**Excel Angled Shutter LJ6C for Keystone Jack Blue**
100-022-GN	**Excel Angled Shutter LJ6C for Keystone Jack Green**
100-022-VT	**Excel Angled Shutter LJ6C for Keystone Jack Violet**
100-175	**Excel Euromod Angled Shutter For Keystone Jack White**
100-175-BK	**Excel Euromod Angled Shutter For Keystone Jack Black**

This data sheet was generated at 1:13am 25th November 2026 and is subject to change at any time.