Excel Cat6A FTP Screened Low Profile 45 Degree Cable Entry Jack Toolless

Part Code: 100-186-24

sales@excel-networking.com
excel-networking.com

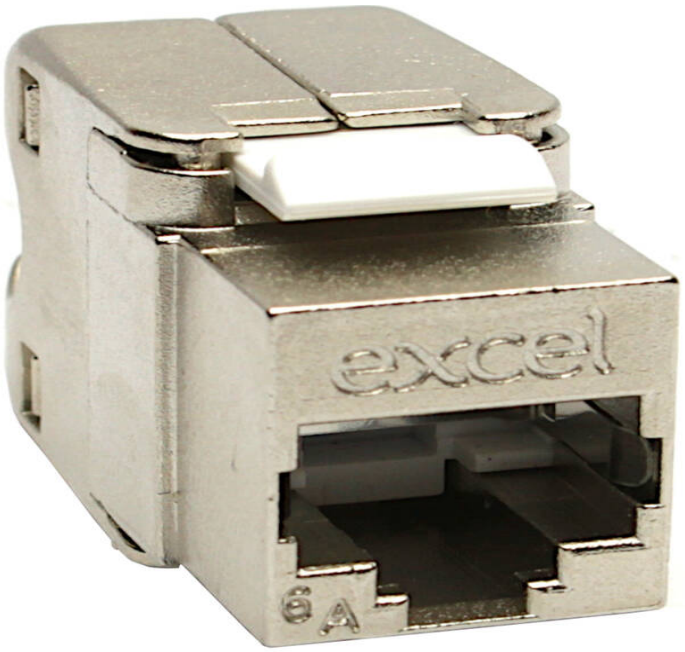

Main Features

- / High-quality die-cast housing
- / just 37.9 mm overall depth
- / 360° shielding protects against alien crosstalk
- / Toolless termination design
- / Supports 10 Gigabit Ethernet applications
- / Unique 5-position adjustable cable holder on the back

Product Overview

Excel Cat6A FTP screened, 45-degree cable entry jack toolless, available as part of our range of Excel Cat6A keystone jacks for RJ45 network connections. This Cat6A Keystone Jack is a RJ45 socket which allows for multiple cable entry directions when this jack is mounted in a standard depth back box. It features a unique cable clamp with 5 adjustable positions on the back of the jack, providing flexibility in holding the cable at a 45-degree angle in various orientations, including downwards, upwards, or sideways. This supports options such as flush shutters at the outlet and angled shutters commonly used with keystone jacks.

This data sheet was generated at 5:19am 23rd November 2026 and is subject to change at any time.

Excel Cat6A FTP Screened Low Profile 45 Degree Cable Entry Jack Toolless

Part Code: 100-186-24

sales@excel-networking.com
excel-networking.com

Product Specifications

Feature	Values
Model	**Jack**
Type of connector	**RJ45 8(8)**
Shielded	**yes**
Category	**6A (IEC)**
Requires termination tool	**no**
Suitable for round cable	**yes**
Suitable for flat cable	**no**
Suitable for solid cores	**yes**
Colour	**Silver**

Additional specifications

Features	Values
Width	**16.2 mm**
Depth	**37.9 mm**
Height	**21.5 mm**
Housing	**Die cast zinc-alloy**
RJ45 Contacts	**Nickel plated phosphor bronze alloy with 50 micro-inch gold plating**
IDC Contacts	**Tin plated phosphor bronze alloy**
RJ45 Life	**Minimum 750 insertions**
Storage temperature	**-40 to +70°C**
Operating temperature	**-10 to +60°C**

This data sheet was generated at 5:19am 23rd November 2026 and is subject to change at any time.

Product drawing

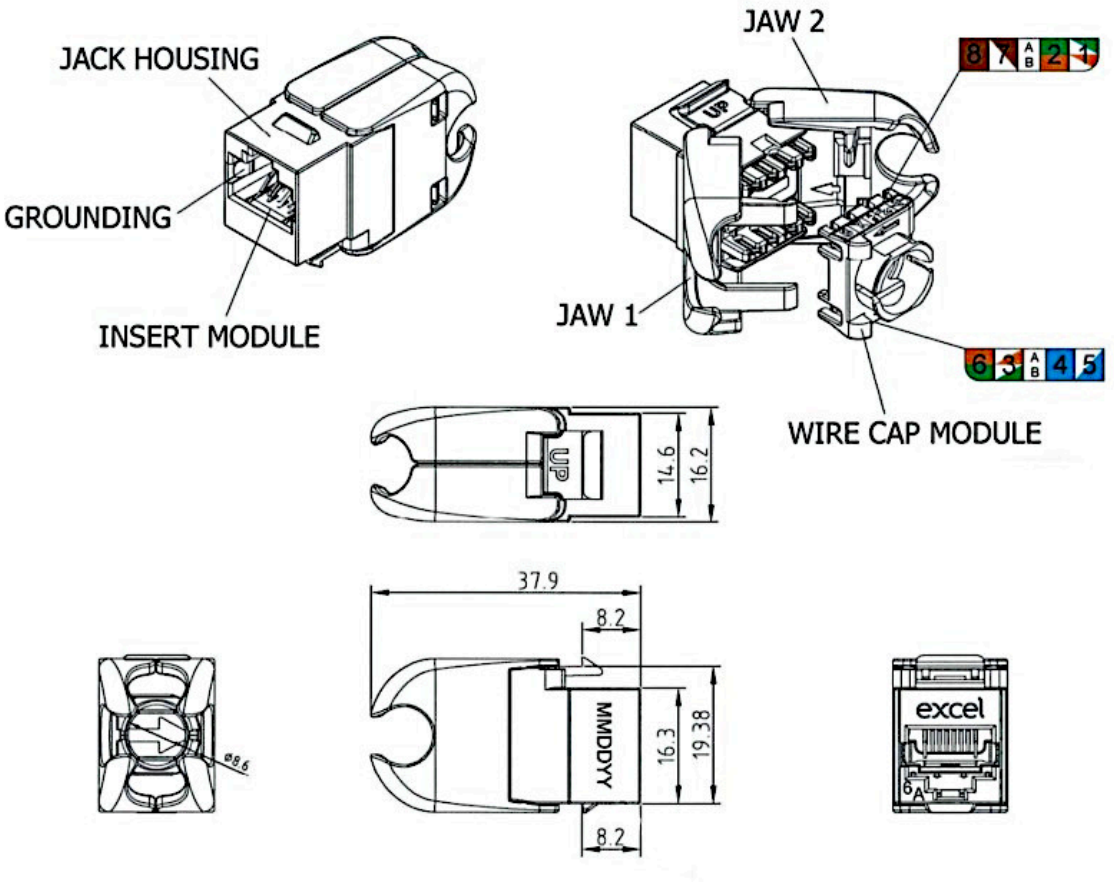

This data sheet was generated at 5:19am 23rd November 2026 and is subject to change at any time.

Product images

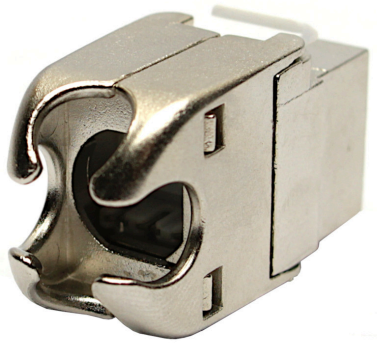

View on the back of the connector



View showing open connector



Cable can be locked into the Fingers to one side or below or above.



Supplied in boxes of 24, plastic free packaging

This data sheet was generated at 5:19am 23rd November 2026 and is subject to change at any time.

sales@excel-networking.com
excel-networking.com

Standards

Applicable standard	Detail
ISO/IEC 11801:2017	Information technology - Generic cabling for customer premises: Part 1 General Requirements
EN 50173-1:2018	Information technology. Generic cabling systems - General requirements
ANSI/TIA 568-D	Balanced Twisted-Pair Telecommunications Cabling and Components Standards
UL-94-V-0	Burning stops within 10 seconds after two applications of ten seconds each of a flame to a test bar. NO flaming drips are allowed.
Directive 2011/65/EU (RoHS II)	Restriction of the Use of Certain Hazardous Substances in Electrical and Electronic Equipment — compliant. Applies within EU member states).
Directive (EU) 2015/863 (RoHS III)	Amending Directive 2011/65/EU to add four phthalates (DEHP, BBP, DBP, DIBP) to Annex II — compliant.
Directive 2008/98/EC (WFD)	Waste Framework Directive — compliant. Implemented in the UK through the Waste (England and Wales) Regulations 2011 (SI 2011 No. 988).
ECHA SCIP Database	Compliant; product does not contain SVHCs (Substances of Very High Concern) as defined under REACH Article 33(1). Submission obligations met under EU REACH and UK REACH.
Regulation (EU) 2019/1021 (POPs)	EU Regulation on Persistent Organic Pollutants — compliant. For Great Britain, compliance is aligned with the Persistent Organic Pollutants (Amendment) (EU Exit) Regulations 2020 (SI 2020 No. 1355).
UK SI 2012 No. 3032	The Restriction of the Use of Certain Hazardous Substances in Electrical and Electronic Equipment Regulations 2012 (UK RoHS) — compliant for Great Britain. Retained EU law, as amended by the Product Safety and Metrology (Amendment etc.) (EU Exit) Regulations 2019.

This data sheet was generated at 5:19am 23rd November 2026 and is subject to change at any time.

sales@excel-networking.com
excel-networking.com

Part Code Table

Part Code	Description
100-186-24	**Excel Cat6A FTP Screened Low Profile 45 Degree Cable Entry Jack Toolless**

This data sheet was generated at 5:19am 23rd November 2026 and is subject to change at any time.