Excel Single Gang Stainless Steel Keystone Faceplate and Back Box 2 Port

Part Code: 100-293

sales@excel-networking.com
excel-networking.com



Main Features

/ Brushed Stainless Steel Faceplates

/ 2 Port Keystone Version

/ Supplied with Standard & Security Screws

/ Single gang 35 mm back box supplied

/ 25 Year system warranty

Product Overview

Excel Single Gang Stainless Steel Keystone Faceplates allow the deployment of Excel Keystone Jacks in either a 1 Port or 2 Port configuration. They are supplied with a 35 mm deep metal back box that can be drilled to accept conduit entry as required. Each faceplate is supplied with both standard and Torx T10 tamper resistant fixing screws making them ideal for installation in a variety of situations both public and secure. The stainless steel faceplates are designed to have "clean lines" by only showing the shutter and label position.

Product Specifications

This data sheet was generated at 4:11am 24th November 2026 and is subject to change at any time.

Excel Single Gang Stainless Steel Keystone Faceplate and Back Box 2 Port

Part Code: 100-293

sales@excel-networking.com
excel-networking.com

Feature	Values
Number of units	**2**
Mounting direction	**Horizontal**
Number of units horizontal	**2**
Material	**Metal**
Material quality	**Stainless steel**
Colour	**Stainless steel**
Width	**86 mm**
Height	**86 mm**

Product drawing

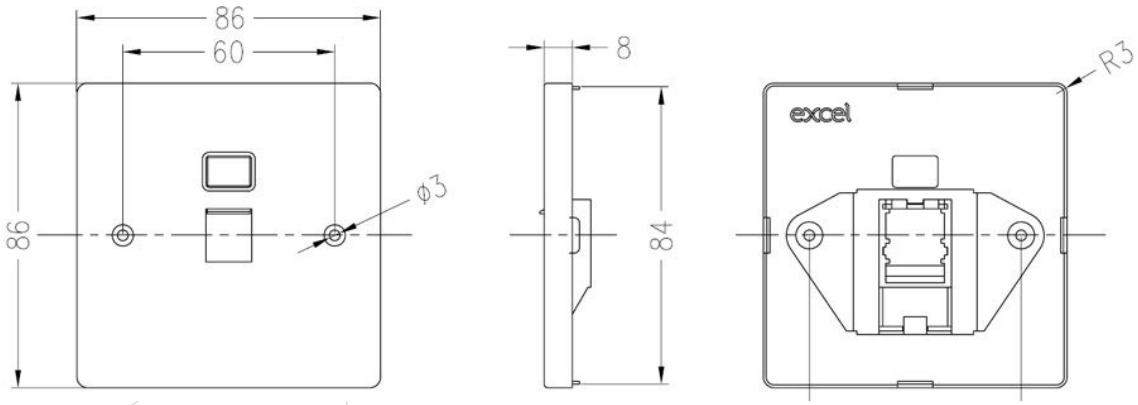

This data sheet was generated at 4:11am 24th November 2026 and is subject to change at any time.

Product drawing

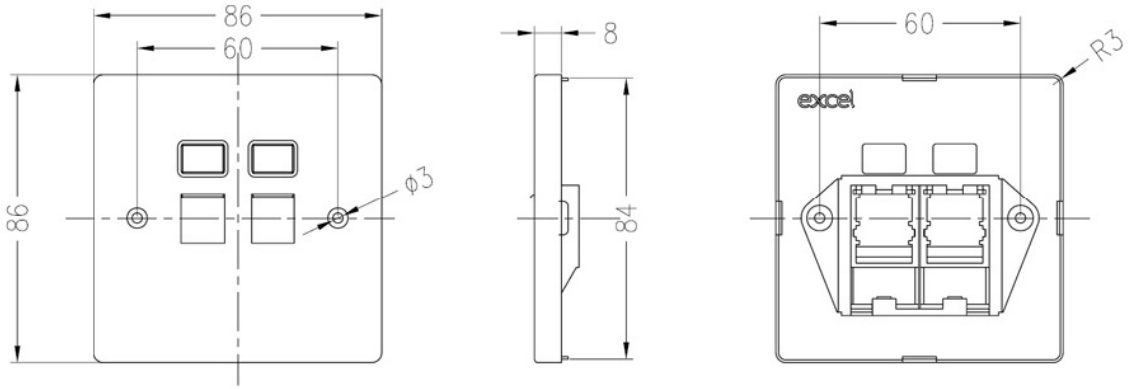

Standards

Applicable standard	Detail
Directive 2011/65/EU (RoHS II)	Restriction of the Use of Certain Hazardous Substances in Electrical and Electronic Equipment — compliant. Applies within EU member states).
Directive (EU) 2015/863 (RoHS III)	Amending Directive 2011/65/EU to add four phthalates (DEHP, BBP, DBP, DIBP) to Annex II — compliant.
Directive 2008/98/EC (WFD)	Waste Framework Directive — compliant. Implemented in the UK through the Waste (England and Wales) Regulations 2011 (SI 2011 No. 988).
ECHA SCIP Database	Compliant; product does not contain SVHCs (Substances of Very High Concern) as defined under REACH Article 33(1). Submission obligations met under EU REACH and UK REACH.
Regulation (EU) 2019/1021 (POPs)	EU Regulation on Persistent Organic Pollutants — compliant. For Great Britain, compliance is aligned with the Persistent Organic Pollutants (Amendment) (EU Exit) Regulations 2020 (SI 2020 No. 1355).
UK SI 2012 No. 3032	The Restriction of the Use of Certain Hazardous Substances in Electrical and Electronic Equipment Regulations 2012 (UK RoHS) — compliant for Great Britain. Retained EU law, as amended by the Product

This data sheet was generated at 4:11am 24th November 2026 and is subject to change at any time.

Safety and Metrology (Amendment etc.) (EU Exit) Regulations 2019.

Part Code Table

Part Code	Description
100-292	**Excel Single Gang Stainless Steel Keystone Faceplate and Back Box 1 Port**
100-293	**Excel Single Gang Stainless Steel Keystone Faceplate and Back Box 2 Port**

This data sheet was generated at 4:11am 24th November 2026 and is subject to change at any time.