Excel Flat Shutter for Keystone Jack 22.5 x 45 mm 1 Port

Part Code: 100-294

sales@excel-networking.com
excel-networking.com



Main Features

- 25x45mm Flat shutter
- Compatible with a range of faceplates
- Snap fit
- Labelling field

Product Overview

A range of mounting options are available for the Excel Keystone Tool‐less Jacks that allow them to be installed in a number of situations. This flexibility results in the ability to have the same jacks terminating the cable in the patch panel and at the outlet.

Product Specifications

Feature	Values
Application	**Mounting cover data connector**

This data sheet was generated at 1:21am 25th November 2026 and is subject to change at any time.

Excel Flat Shutter for Keystone Jack 22.5 x 45 mm 1 Port

Part Code: 100-294

sales@excel-networking.com
excel-networking.com

Material	**Plastic**
Colour	**White**
RAL-number (akin)	**9003**
Type of fastening	**Engage (snap)**
Width of device	**22.5 mm**
Height of device	**45 mm**

Product drawing

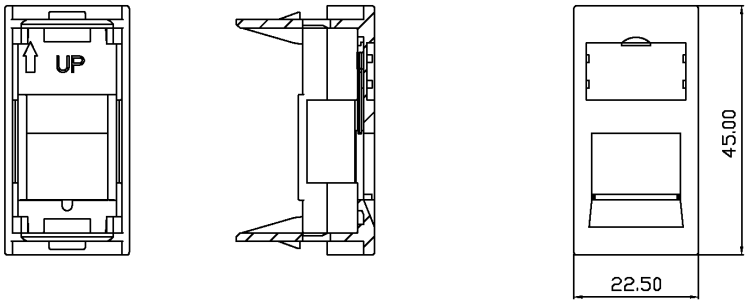

Part Code Table

Part Code	Description
100-294	**Excel Flat Shutter for Keystone Jack 22.5 x 45 mm 1 Port**

This data sheet was generated at 1:21am 25th November 2026 and is subject to change at any time.