Excel Cat6 (UTP) Unscreened RJ45 Slimline Module White

Part Code: 100-430

sales@excel-networking.com
excel-networking.com

CIBSE TM65 Embodied Carbon: 0.002 kg CO2e



Main Features

- / Category 6
- / Individual snap in modules
- / Individual port slide labelling system
- / High Density Design
- / LSA compatible IDC
- / Supports Gigabit Ethernet

Product Overview

Excel Category 6 3 in 1 modules offer the ultimate in flexibility, space utilisation and ease of installation. The totally modular design allows the mounting of up to 3 shuttered RJ45 ports in a standard flat or bevelled single gang faceplate or up to 6 in a double gang facia.

The unique design means that you only load shuttered outlets as required, any capacity within the plate which is required for a later date is simply blanked off, providing a neat and easy to use completed installation. Individual port labelling is also quick and easy with standard Excel outlet slide in fields incorporated into the design.

This data sheet was generated at 8:21pm 25th November 2026 and is subject to change at any time.

sales@excel-networking.com
excel-networking.com

Product Specifications

Feature	Values
Surface mounted	**Yes (faceplate required)**
Flush-mounted installation	**Yes (faceplate required)**
Floor box/sub-floor mounted	**Yes (faceplate required)**
Type of fastening	**Engage (snap)**
Type of connector	**RJ45 8(8)**
Category	**6**
Colour	**White**
RAL-number	**9016**
Connection type	**LSA**
Shielded housing	**no**
With label space	**yes**
Colour coding	**yes**
Width of device	**16.6 mm**
Height of device	**50 mm**
Depth of device	**31.5 mm**

This data sheet was generated at 8:21pm 25th November 2026 and is subject to change at any time.

sales@excel-networking.com
excel-networking.com

Product drawing

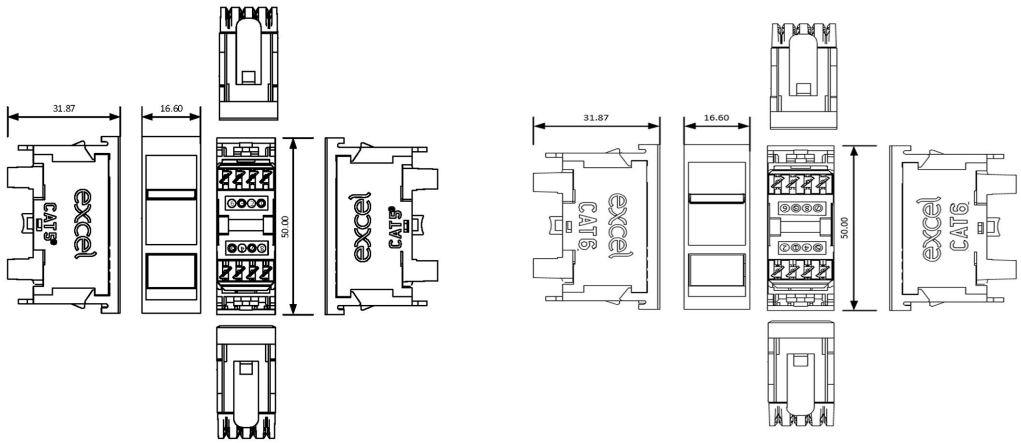

Standards

Applicable standard	Detail
ISO/IEC 11801:2011 (Ed 2.2)	Information technology - Generic cabling for customer premises
IEC 61156-5:2012 (Ed 2.1)	Multicore and symmetrical pair/quad cables for digital communications - Part 5: Symmetrical pair/quad cables with transmission characteristics up to 1 000 MHz - Horizontal floor wiring - Sectional specification
EN 50173-1:2018	Information technology. Generic cabling systems - General requirements
EN 50173-2:2007 including amendment A1:2010	Information technology. Generic cabling systems - Office premises
ANSI/TIA 568-C:2009	Balanced Twisted-Pair Telecommunications Cabling and Components Standards
Directive 2011/65/EU (RoHS II)	Restriction of the Use of Certain Hazardous Substances in Electrical and Electronic Equipment — compliant. Applies within EU member states).
Directive (EU) 2015/863 (RoHS III)	Amending Directive 2011/65/EU to add four phthalates (DEHP, BBP, DBP, DIBP) to Annex II — compliant.

This data sheet was generated at 8:21pm 25th November 2026 and is subject to change at any time.

Directive 2008/98/EC (WFD)	Waste Framework Directive — compliant. Implemented in the UK through the Waste (England and Wales) Regulations 2011 (SI 2011 No. 988).
ECHA SCIP Database	Compliant; product does not contain SVHCs (Substances of Very High Concern) as defined under REACH Article 33(1). Submission obligations met under EU REACH and UK REACH.
Regulation (EU) 2019/1021 (POPs)	EU Regulation on Persistent Organic Pollutants — compliant. For Great Britain, compliance is aligned with the Persistent Organic Pollutants (Amendment) (EU Exit) Regulations 2020 (SI 2020 No. 1355).
UK SI 2012 No. 3032	The Restriction of the Use of Certain Hazardous Substances in Electrical and Electronic Equipment Regulations 2012 (UK RoHS) — compliant for Great Britain. Retained EU law, as amended by the Product Safety and Metrology (Amendment etc.) (EU Exit) Regulations 2019.

Part Code Table

Part Code	Description
100-405	**Excel Cat5e (UTP) Unscreened RJ45 Slimline Module White**
100-430	**Excel Cat6 (UTP) Unscreened RJ45 Slimline Module White**

This data sheet was generated at 8:21pm 25th November 2026 and is subject to change at any time.