Excel Cat6A FTP Screened Low Profile Keystone Jack Toolless Silver (24-Pack)

Part Code: 100-973-24

sales@excel-networking.com
excel-networking.com

CIBSE TM65 Embodied Carbon: 3.621 kg CO2e



Main Features

- / High quality die cast housing
- / Low profile design: 29 mm overall depth
- / 360 degree shielding protects against alien crosstalk
- / Toolless termination design
- / Supports 10 Gigabit Ethernet application
- / New reduced packaging box size

Product Overview

Install your network connections with the Excel Cat6A FTP Screened Low Profile Keystone Jack. Part of our premium range of Excel Cat6A Keystone Jacks, this innovative RJ45 socket is designed for superior performance and ease of use.

Low Profile Design: This compact, toolless termination jack fits effortlessly into standard depth back boxes, providing versatile cable entry directions and all excel keystone panels.
Superior Shielding: The FTP (Foiled Twisted Pair) screened design ensures excellent protection against electromagnetic interference, guaranteeing reliable and fast data transmission.
Easy Installation: Enjoy a hassle-free setup with the toolless termination feature and unique packaging, saving you time and effort.
Flexible Mounting Options: Compatible with both flush and angled shutters and our range of excel panels, this keystone jack adapts to various installation requirements, making it ideal for commercial settings.

This data sheet was generated at 11:09am 24th November 2026 and is subject to change at any time.

Sustainable Packaging: Supplied in plastic-free packaging with a new, more condensed design, including QR codes for easy access to more information.
Standards Compliance: Meets EN50173-1 and ISO/IEC 11801 Cat6A specifications, ensuring top performance and reliability.
High-Quality Build: Crafted in a sleek silver finish, this keystone jack not only performs exceptionally but also adds a professional look to your networking setup.

Ensure your network is equipped with the best. Choose the Excel Cat6A FTP Screened Low Profile Keystone Jack for reliable, high-speed connections every time.

Product Specifications

Feature	Values
Model	**Jack**
Type of connector	**RJ45 8(8)**
Shielded	**yes**
Category	**6A (IEC)**
Requires termination tool	**no**
Suitable for round cable	**yes**
Suitable for flat cable	**no**
Suitable for solid cores	**yes**
Colour	**Silver**
Min. AWG size	**23**
Max. AWG size	**26**

This data sheet was generated at 11:09am 24th November 2026 and is subject to change at any time.

Excel Cat6A FTP Screened Low Profile Keystone Jack Toolless Silver (24-Pack)

Part Code: 100-973-24

sales@excel-networking.com
excel-networking.com

Product drawings

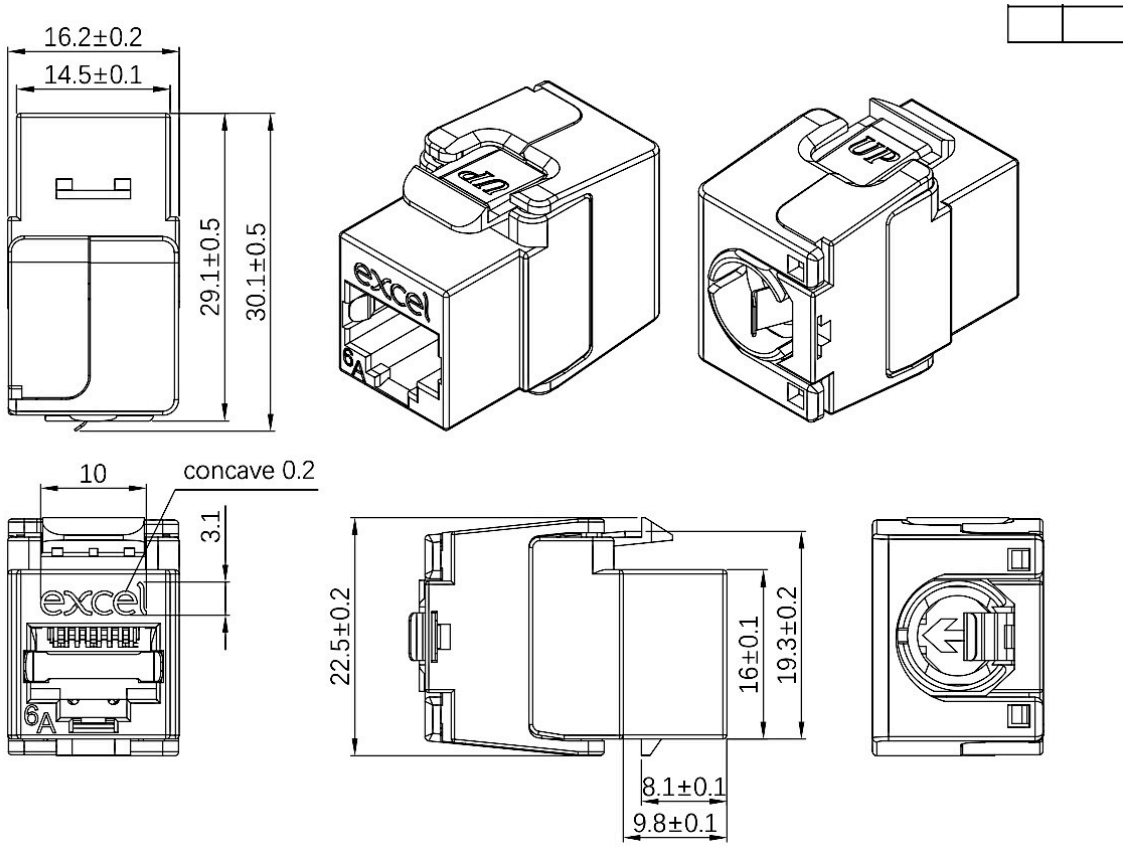

Additional specifications

Feature	Value
Width	**16.2 mm**
Depth	**29 mm**
Height	**22.1 mm**
Housing	**Die cast zinc-alloy**
RJ45 contacts	**A nickel-plated phosphor bronze alloy with 50 microinch gold plating**

This data sheet was generated at 11:09am 24th November 2026 and is subject to change at any time.

IDC contacts	**Tin plated phosphor bronze alloy**
RJ45 Life	**Minimum 750 insertions**
Storage temprature	**-40 to +68°C**
Operating temprature	**-10 to +60°C**

Standards

Applicable standard	Detail
Directive 2008/98/EC (WFD)	Waste Framework Directive — compliant. Implemented in the UK through the Waste (England and Wales) Regulations 2011 (SI 2011 No. 988).
ECHA SCIP Database	Compliant; product does not contain SVHCs (Substances of Very High Concern) as defined under REACH Article 33(1). Submission obligations met under EU REACH and UK REACH.
Regulation (EU) 2019/1021 (POPs)	EU Regulation on Persistent Organic Pollutants — compliant. For Great Britain, compliance is aligned with the Persistent Organic Pollutants (Amendment) (EU Exit) Regulations 2020 (SI 2020 No. 1355).
Directive 2011/65/EU (RoHS II)	Restriction of the Use of Certain Hazardous Substances in Electrical and Electronic Equipment — compliant. Applies within EU member states).
Directive (EU) 2015/863 (RoHS III)	Amending Directive 2011/65/EU to add four phthalates (DEHP, BBP, DBP, DIBP) to Annex II — compliant.
UK SI 2012 No. 3032	The Restriction of the Use of Certain Hazardous Substances in Electrical and Electronic Equipment Regulations 2012 (UK RoHS) — compliant for Great Britain. Retained EU law, as amended by the Product Safety and Metrology (Amendment etc.) (EU Exit) Regulations 2019.
ISO/IEC 11801:2017	Information technology — Generic cabling for customer premises: Part 1 General requirements.

This data sheet was generated at 11:09am 24th November 2026 and is subject to change at any time.

EN 50173-1:2018	Information technology — Generic cabling systems: General requirements.
IEC 60603-7	Connectors for electronic equipment — Part 7: Detail specification for 8-way, unshielded, free and fixed connectors.
IEC 60603-7-1	Connectors for electronic equipment — Part 7-1: Detail specification for 8-way, shielded, free and fixed connectors.
IEC 60603-7-51	Connectors for electronic equipment — Part 7-51: Detail specification for 8-way, shielded, free and fixed connectors, for data transmissions with frequencies up to 500 MHz.
IEEE 802.3bt (Type 4)	Compliant with IEEE 802.3bt Type 4

Part Code Table

Part Code	Description
100-973	**Excel Cat6A FTP Screened Low Profile Keystone Jack Toolless Silver**
100-973-24	**Excel Cat6A FTP Screened Low Profile Keystone Jack Toolless Silver (24-Pack)**
100-973-8	**Excel Cat6A FTP Screened Low Profile Keystone Jack Toolless Silver (8-Pack)**

This data sheet was generated at 11:09am 24th November 2026 and is subject to change at any time.