Excel Enbeam 6 Port 12 Fibre OS2 LC-MTP ExpressNet Module (MOD1)

Part Code: 201-612-MOD1

sales@excel-networking.com
excel-networking.com

CIBSE TM65 Embodied Carbon: 0.790 kg CO2e

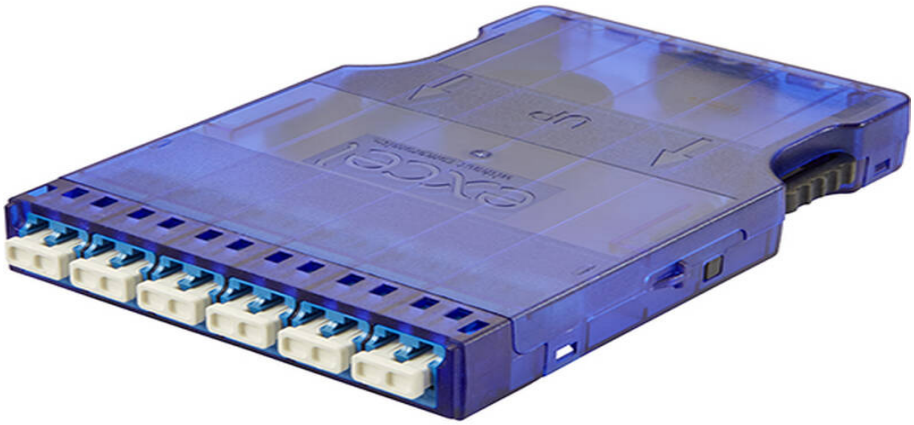

Main Features

/ 6 Port duplex MTP (12 Fibre) module

/ Compatible with Excel ExpressNet 4 & 8 module patch panels frames

/ Toolless assembly and patch panel fitting

/ Available in OM3/OM4/OS2

/ MTP adapter in rear of module

/ 25 Year system warranty available

Product Overview

Excel 6 Port Duplex (12 Fibre) MTP Modules are available with Multimode and Singlemode adapters. Manufactured from high impact flame retardant plastic the modules are fitted with LC duplex adapters to the front of the module and MTP to the rear with an array cable inside, an internal management wheel stores the slack fibre.

After termination the module is simply fitted to one of the compatible Excel Mixed Use Patch Panels permitting different categories of Fibre and Copper to be presented on the same panel without interference. The modules are easily fitted and removed from the rear of the patch panel by activating release latches.

This data sheet was generated at 2:36pm 25th November 2026 and is subject to change at any time.

Product Specifications

Feature	Values
Suitable for number of fibre cores	**12**
With coupling/adapter	**yes**
Type of connector external	**LC**
Type of connector interior	**MT/MPO**
Fibre type	**OS2**
APC-type	**yes**
Colour	**Blue**

Additional specifications

Features	Values
Width	**95.4mm**
Height	**18mm**
Depth	**137.4mm**
IP rating	**IP20**
Material	**UL94V-0 High impact flame retardant plastiC**
Operating temprature	**-40 to +80 °C**

This data sheet was generated at 2:36pm 25th November 2026 and is subject to change at any time.

Product drawing

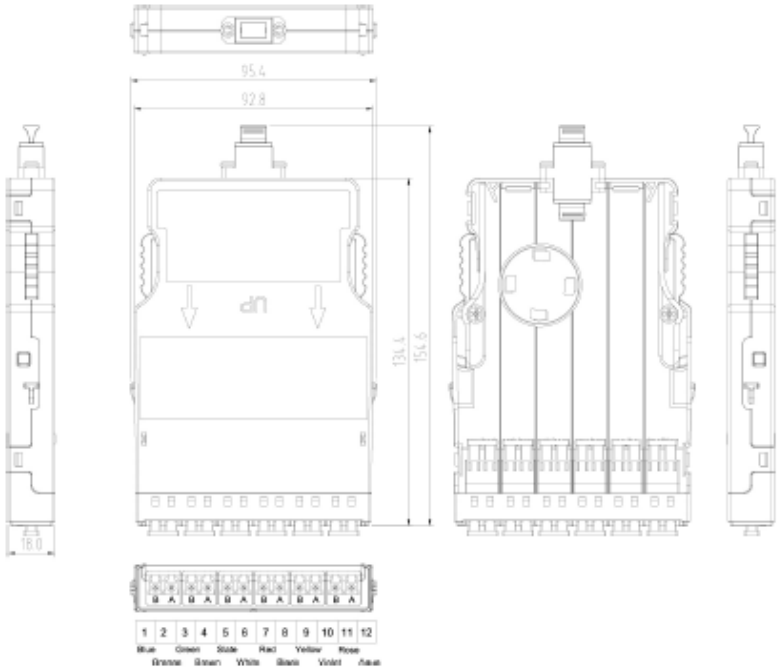

Standards

Applicable standard	Detail
IEC 61754-1:2013	Fibre optic interconnecting devices and passive components - Fibre optic connector interfaces - Part 1: General and guidance
ISO/IEC 11801-1:2017	Information technology - Generic cabling for customer premises: Part 1 General Requirements
EN 50173-1:2018	Information technology. Generic cabling systems - General requirements
Directive 2008/98/EC (WFD)	Waste Framework Directive — compliant. Implemented in the UK through the Waste (England and Wales) Regulations 2011 (SI 2011 No. 988).
ECHA SCIP Database	Compliant; product does not contain SVHCs (Substances of Very High Concern) as defined under REACH Article

This data sheet was generated at 2:36pm 25th November 2026 and is subject to change at any time.

	33(1). Submission obligations met under EU REACH and UK REACH.
Regulation (EU) 2019/1021 (POPs)	EU Regulation on Persistent Organic Pollutants — compliant. For Great Britain, compliance is aligned with the Persistent Organic Pollutants (Amendment) (EU Exit) Regulations 2020 (SI 2020 No. 1355).
Directive 2011/65/EU (RoHS II)	Restriction of the Use of Certain Hazardous Substances in Electrical and Electronic Equipment — compliant. Applies within EU member states).
Directive (EU) 2015/863 (RoHS III)	Amending Directive 2011/65/EU to add four phthalates (DEHP, BBP, DBP, DIBP) to Annex II — compliant.
UK SI 2012 No. 3032	The Restriction of the Use of Certain Hazardous Substances in Electrical and Electronic Equipment Regulations 2012 (UK RoHS) — compliant for Great Britain. Retained EU law, as amended by the Product Safety and Metrology (Amendment etc.) (EU Exit) Regulations 2019.

Part Code Table

Part Code	Description
201-610	**Excel Enbeam 6 Port 12 Fibre OM3 LC-MTP ExpressNet Module**
201-611	**Excel Enbeam 6 Port 12 Fibre OM4 LC-MTP ExpressNet Module**
201-612	**Excel Enbeam 6 Port 12 Fibre OS2 LC-MTP ExpressNet Module**
201-612-MOD1	**Excel Enbeam 6 Port 12 Fibre OS2 LC-MTP ExpressNet Module (MOD1)**
201-612-MOD2	**Excel Enbeam 6 Port 12 Fibre OS2 LC-MTP ExpressNet Module (MOD2)**

This data sheet was generated at 2:36pm 25th November 2026 and is subject to change at any time.