Excel Enbeam 4 Port ST Tamperproof Connection Box Gland Entry

Part Code: 202-020

sales@excel-networking.com
excel-networking.com

CIBSE TM65 Embodied Carbon: 3.812 kg CO2e



Main Features

- Tamper-proof
- Ideal for conduit or cable gland entry
- 20mm knock out on every side and pre-drilled fixing holes
- CIBSE TM65 Embodied Carbon: 3.812 kg CO2e

Product Overview

Patch boxes suitable for wall, floor or desk mounting.

Product Specifications

Feature	Values
Surface mounted	**Wall mount/Conduit**
Type of fastening	**Tamperproof**

This data sheet was generated at 1:29pm 23rd November 2026 and is subject to change at any time.

Excel Enbeam 4 Port ST Tamperproof Connection Box Gland Entry

Part Code: 202-020

sales@excel-networking.com
excel-networking.com

Type of connector	**ST**
With couplers	**4 Port Loaded**
Suitable for number of couplers	**4**
Suitable for type of fibre	**Multi mode**
IP-rating	**IP20**
Width	**104 mm**
Height	**164 mm**
Depth	**36.2 mm**

Product drawing

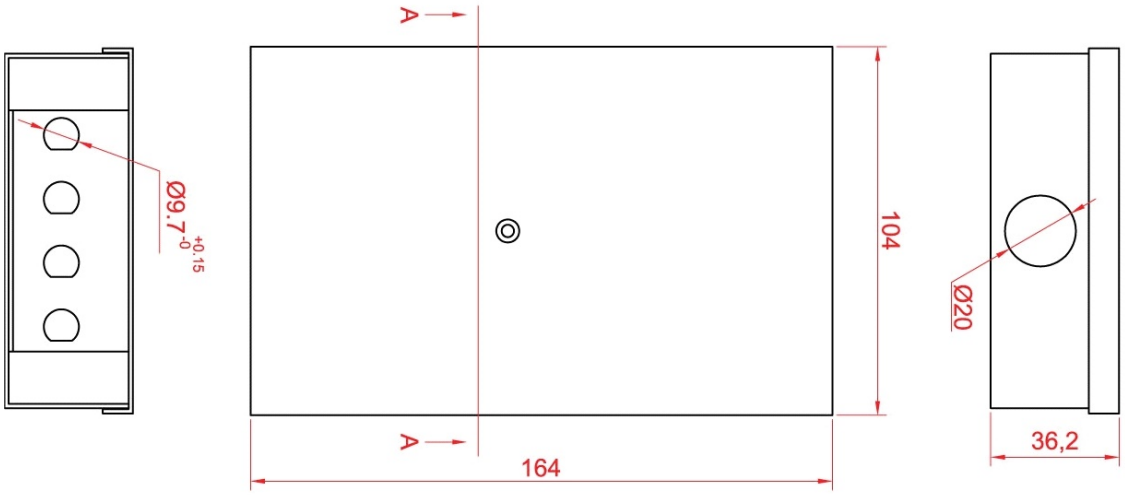

This data sheet was generated at 1:29pm 23rd November 2026 and is subject to change at any time.

sales@excel-networking.com
excel-networking.com

Standards

Applicable standard	Detail
Directive 2011/65/EU (RoHS II)	Restriction of the Use of Certain Hazardous Substances in Electrical and Electronic Equipment — compliant. Applies within EU member states).
Directive (EU) 2015/863 (RoHS III)	Amending Directive 2011/65/EU to add four phthalates (DEHP, BBP, DBP, DIBP) to Annex II — compliant.
Directive 2008/98/EC (WFD)	Waste Framework Directive — compliant. Implemented in the UK through the Waste (England and Wales) Regulations 2011 (SI 2011 No. 988).
ECHA SCIP Database	Compliant; product does not contain SVHCs (Substances of Very High Concern) as defined under REACH Article 33(1). Submission obligations met under EU REACH and UK REACH.
Regulation (EU) 2019/1021 (POPs)	EU Regulation on Persistent Organic Pollutants — compliant. For Great Britain, compliance is aligned with the Persistent Organic Pollutants (Amendment) (EU Exit) Regulations 2020 (SI 2020 No. 1355).
UK SI 2012 No. 3032	The Restriction of the Use of Certain Hazardous Substances in Electrical and Electronic Equipment Regulations 2012 (UK RoHS) — compliant for Great Britain. Retained EU law, as amended by the Product Safety and Metrology (Amendment etc.) (EU Exit) Regulations 2019.

Part Code Table

Part Code	Description
202-020	**Excel Enbeam 4 Port ST Tamperproof Connection Box Gland Entry**

This data sheet was generated at 1:29pm 23rd November 2026 and is subject to change at any time.