Excel Enbeam OS2 Fibre Optic Patch Lead Pull Tab LC-LC Singlemode 9/125 DX LS0H Yellow 3 m

Part Code: 202-503

sales@excel-networking.com
excel-networking.com



Main Features

- Available in OM3/OM4/OS2
- 100% Optically Tested
- Low Loss Connectors
- Very small 2mm diameter cable
- Easy polarity change
- 25 Year system warranty

Product Overview

Excel's range of LC Uniboot patch cords provide excellent performance in a compact design, using 2 mm round cable containing 2 x 600 micron diameter fibres, which are ideal in high density applications. They are available in a choice of OM3, OM4 or OS2 bend-insensitive fibre.

These patch cords are available in two versions - standard uniboot and pull-tab version. Both versions allow for easy polarity changing.

Product Specifications

This data sheet was generated at 2:07pm 27th November 2026 and is subject to change at any time.

Excel Enbeam OS2 Fibre Optic Patch Lead Pull Tab LC-LC Singlemode 9/125 DX LS0H Yellow 3 m

Part Code: 202-503

sales@excel-networking.com
excel-networking.com

Feature	Values
Fibre type	**Single mode**
Category	**OS2**
Number of Cores	**2**
Outer diameter sheath single fibre	**1.6 mm**
Cable type	**Duplex**
Length	**3 m**
Type of connector connection 1	**LC (Pull Tab)**
Type of connector connection 2	**LC (Pull Tab)**
Outer sheath colour	**Yellow**
Strain relief boot	**Push-on**
Flame retardant according to IEC 60332-1-2	**yes**
Low smoke (acc. IEC 61034-2)	**yes**

Cable specifications

Features	Values
Cable Construction	**Round Duplex**
No. of Fibres	**2**
Cable Nominal Diamter	**2.0 mm**
Colour	**Yellow**
Strength members	**Aramid Yarn**
Temperature range	**-20 °C to +70 °C**
Connector Material	**Composite**
Minimum bend radius (loaded)	**10 x cable diameter**

This data sheet was generated at 2:07pm 27th November 2026 and is subject to change at any time.

Connector Ferrule	**1.25 mm Ceramic**
Ferrule End Face	**UPC Polish**
Connector Insertion Loss	**Max. 0.3 dB**

Fibre specifications

Features	OS2
Fibre Attenuation @ 1310nm	**Less than 0.35 dB/km**
Fibre Attenuation @ 1550nm	**Less than 0.20 dB/km**
Connector IL - Typical	**0.15 dB**
Connector IL - Max	**0.3 dB**
Connector Return Loss	**Less than -50 dB**

Cross-section diagram

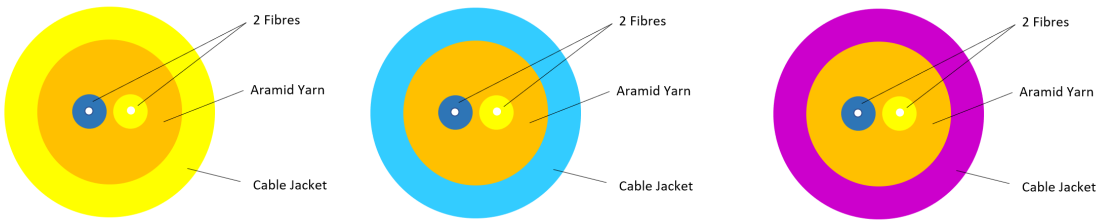

This data sheet was generated at 2:07pm 27th November 2026 and is subject to change at any time.

Product drawing

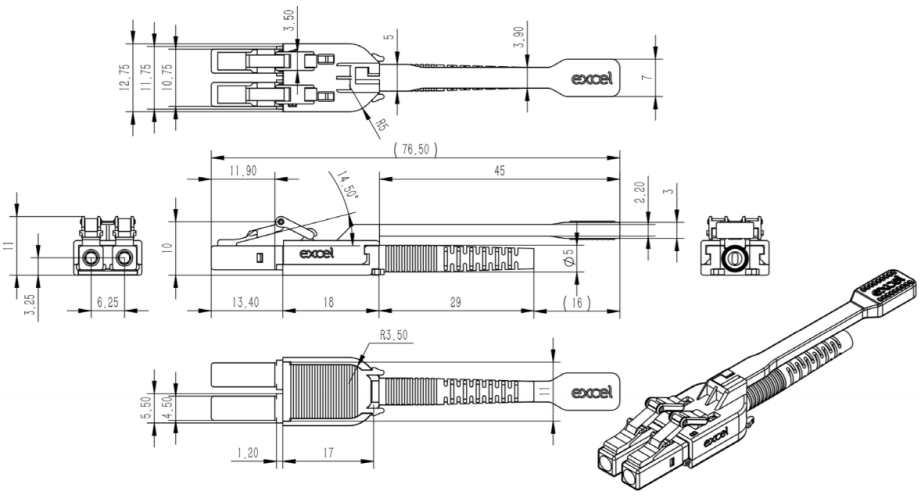

Standards

Applicable standard	Detail
BS EN 60332-1-2:2004+A11:2016	Tests on electric and optical fibre cables under fire conditions - Test for vertical flame propagation for a single insulated wire or cable. Procedure for 1 kW pre-mixed flame
IEC 60793-1-1:2022	Optical fibres - Part 1-1: Measurement methods and test procedures - General and guidance
IEC 60793-2:2015	Optical fibres - Part 2: Product specifications - General
IEC 60793-2-10:2017	Sectional specification for A1 multimode fibres
IEC 60793-1-20:2014	Optical fibres - Part 1-20: Measurement methods and test procedures - Fibre geometry
IEC 60793-1-21:2001	Optical fibres - Part 1-21: Measurement methods and test procedures - Coating geometry
IEC 60793-1-22:2001	Optical fibres - Part 1-22: Measurement methods and test procedures - Length measurement

This data sheet was generated at 2:07pm 27th November 2026 and is subject to change at any time.

IEC 60793-1-30:2010	Optical fibres - Part 1-30: Measurement methods and test procedures - Fibre proof test
IEC 60793-1-31:2010	Optical fibres - Part 1-31: Measurement methods and test procedures - Tensile Strength
ITU-T G.652:2016	Characteristics of a single-mode optical fibre and cable
ITU-T G.657:2016	Characteristics of a bending-loss insensitive single-mode optical fibre and cable
EN 50173-1:2018	Information technology. Generic cabling systems - General requirements
EN 50173-2:2007 + A1:2010	Information technology. Generic cabling systems - Office premises
IEC 61754-1:2013	Fibre optic interconnecting devices and passive components - Fibre optic connector interfaces - Part 1: General and guidance
IEC 61754-2:1996	Fibre optic connector interfaces - Part 2: Type BFOC/2,5 connector family
IEC 61754-4:2013	Fibre optic interconnecting devices and passive components - Fibre optic connector interfaces - Part 4: Type SC connector family
IEC 61754-4-100:2015	Fibre optic interconnecting devices and passive components - Fibre optic connector interfaces - Part 4-100: Type SC connector family - Simplified receptacle SC-PC connector interfaces
IEC 61754-4-100:2015	Fibre optic interconnecting devices and passive components - Fibre optic connector interfaces - Part 4-100: Type SC connector family - Simplified receptacle SC-PC connector interfaces
ISO/IEC 11801-1:2017	Information technology - Generic cabling for customer premises: Part 1 General Requirements
Directive 2011/65/EU (RoHS II)	Restriction of the Use of Certain Hazardous Substances in Electrical and Electronic Equipment — compliant. Applies within EU member states).
Directive (EU) 2015/863 (RoHS III)	Amending Directive 2011/65/EU to add four phthalates (DEHP, BBP, DBP, DIBP) to Annex II — compliant.

This data sheet was generated at 2:07pm 27th November 2026 and is subject to change at any time.

Directive 2008/98/EC (WFD)	Waste Framework Directive — compliant. Implemented in the UK through the Waste (England and Wales) Regulations 2011 (SI 2011 No. 988).
ECHA SCIP Database	Compliant; product does not contain SVHCs (Substances of Very High Concern) as defined under REACH Article 33(1). Submission obligations met under EU REACH and UK REACH.
Regulation (EU) 2019/1021 (POPs)	EU Regulation on Persistent Organic Pollutants — compliant. For Great Britain, compliance is aligned with the Persistent Organic Pollutants (Amendment) (EU Exit) Regulations 2020 (SI 2020 No. 1355).
UK SI 2012 No. 3032	The Restriction of the Use of Certain Hazardous Substances in Electrical and Electronic Equipment Regulations 2012 (UK RoHS) — compliant for Great Britain. Retained EU law, as amended by the Product Safety and Metrology (Amendment etc.) (EU Exit) Regulations 2019.

Part Code Table

Part Code	Description
202-500	**Excel Enbeam OS2 Fibre Optic Patch Lead Pull Tab LC-LC Singlemode 9/125 DX LS0H Yellow 0.5 m**
202-501	**Excel Enbeam OS2 Fibre Optic Patch Lead Pull Tab LC-LC Singlemode 9/125 DX LS0H Yellow 1 m**
202-502	**Excel Enbeam OS2 Fibre Optic Patch Lead Pull Tab LC-LC Singlemode 9/125 DX LS0H Yellow 2 m**
202-503	**Excel Enbeam OS2 Fibre Optic Patch Lead Pull Tab LC-LC Singlemode 9/125 DX LS0H Yellow 3 m**
202-505	**Excel Enbeam OS2 Fibre Optic Patch Lead Pull Tab LC-LC Singlemode 9/125 DX LS0H Yellow 5 m**
202-510	**Excel Enbeam OS2 Fibre Optic Patch Lead Pull Tab LC-LC Singlemode 9/125 DX LS0H Yellow 10 m**
202-515	**Excel Enbeam OS2 Fibre Optic Patch Lead Pull Tab LC-LC Singlemode 9/125 DX**

This data sheet was generated at 2:07pm 27th November 2026 and is subject to change at any time.

	LS0H Yellow 15 m
202-520	**Excel Enbeam OS2 Fibre Optic Patch Lead Pull Tab LC-LC Singlemode 9/125 DX LS0H Yellow 20 m**

This data sheet was generated at 2:07pm 27th November 2026 and is subject to change at any time.