Excel Enbeam OM3 Fibre Optic Patch Lead Uniboot LC-LC Multimode 50/125 DX LS0H Aqua 10 m

Part Code: 203-410

sales@excel-networking.com
excel-networking.com



Main Features

- / Available in OM3/OM4/OS2
- / Low Loss Connectors
- / Easy polarity change
- / 100% Optically Tested
- / Very small 2mm diameter cable
- / 25 Year system warranty

Product Overview

Excel's range of LC Uniboot patch cords provide excellent performance in a compact design, using 2 mm round cable containing 2 x 600 micron diameter fibres, which are ideal in high density applications. They are available in a choice of OM3, OM4 or OS2 bend-insensitive fibre.

These patch cords are available in two versions - standard uniboot and pull-tab version. Both versions allow for easy polarity changing.

Product Specifications

This data sheet was generated at 6:11pm 25th November 2026 and is subject to change at any time.

sales@excel-networking.com
excel-networking.com

Feature	Values
Fibre type	**Multi mode 50/125**
Category	**OM3**
Number of Cores	**2**
Outer diameter sheath single fibre	**2 mm**
Cable type	**Duplex**
Length	**10 m**
Type of connector connection 1	**LC (Uniboot)**
Type of connector connection 2	**LC (Uniboot)**
Outer sheath colour	**Aqua**
Strain relief boot	**Push-on**
Flame retardant according to IEC 60332-1-2	**yes**
Low smoke (acc. IEC 61034-2)	**yes**

Cable specifications

Features	OM3	OM4
Cable Construction	**Round Duplex**	**Round Duplex**
No. of Fibres	**2**	**2**
Cable Nominal Diamter	**2.0mm**	**2.0mm**
Colour	**Aqua**	**Heather Violet**
Strength members	**Aramid Yarn**	**Aramid Yarn**
Temperature range	**-20C to +70C**	**-20C to +70C**
Connector Material	**Composite**	**Composite**
Minimum bend radius (loaded)	**10 x cable diameter**	**10 x cable diameter**

This data sheet was generated at 6:11pm 25th November 2026 and is subject to change at any time.

Connector Ferrule	**1.25mm Ceramic**	**1.25mm Ceramic**
Ferrule End Face	**PC Polish**	**PC Polish**
Connector Insertion Loss	**Max. 0.3dB**	**Max. 0.3dB**

Fibre specifications

Features	Values
Fibre Attenuation @ 850nm	**Less than 3.5dB/km**
Fibre Attenuation @ 1300nm	**Less than 1.5dB/km**
Connector IL - Typical	**0.15dB**
Connector IL - Max	**0.3dB**
Connector Return Loss	**Less than -30dB**

Cross-section diagram

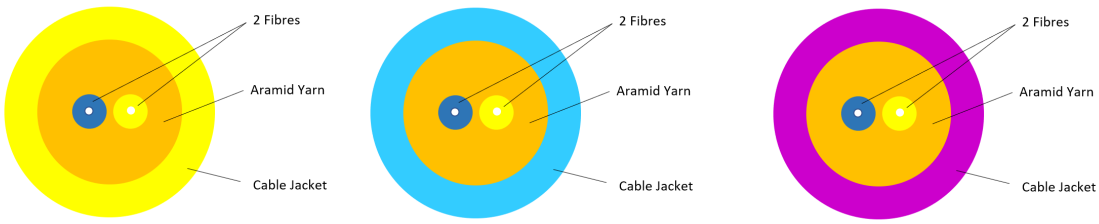

This data sheet was generated at 6:11pm 25th November 2026 and is subject to change at any time.

Product drawing

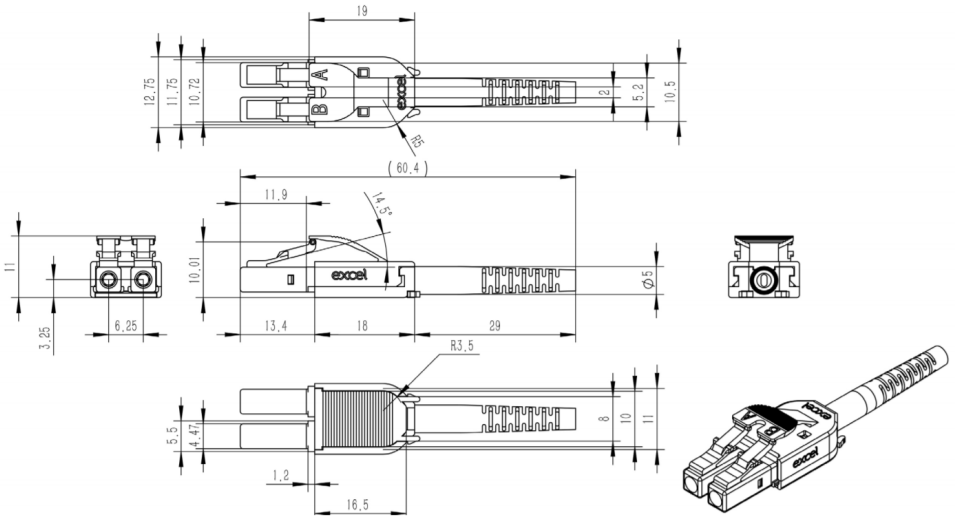

Standards

Applicable standard	Detail
BS EN 60332-1-2:2004+A11:2016	Tests on electric and optical fibre cables under fire conditions - Test for vertical flame propagation for a single insulated wire or cable. Procedure for 1 kW pre-mixed flame
IEC 60793-1-1:2022	Optical fibres - Part 1-1: Measurement methods and test procedures - General and guidance
IEC 60793-2:2015	Optical fibres - Part 2: Product specifications - General
IEC 60793-2-10:2017	Sectional specification for A1 multimode fibres
IEC 60793-1-20:2014	Optical fibres - Part 1-20: Measurement methods and test procedures - Fibre geometry
IEC 60793-1-21:2001	Optical fibres - Part 1-21: Measurement methods and test procedures - Coating geometry
IEC 60793-1-22:2001	Optical fibres - Part 1-22: Measurement methods and test procedures - Length measurement

This data sheet was generated at 6:11pm 25th November 2026 and is subject to change at any time.

IEC 60793-1-30:2010	Optical fibres - Part 1-30: Measurement methods and test procedures - Fibre proof test
IEC 60793-1-31:2010	Optical fibres - Part 1-31: Measurement methods and test procedures - Tensile Strength
ITU G.651.1	Characteristics of a 50/125 µm multimode graded index optical fibre cable for the optical access network
EN 50173-1:2018	Information technology. Generic cabling systems - General requirements
EN 50173-2:2007 + A1:2010	Information technology. Generic cabling systems - Office premises
IEC 61754-1:2013	Fibre optic interconnecting devices and passive components - Fibre optic connector interfaces - Part 1: General and guidance
IEC 61754-2:1996	Fibre optic connector interfaces - Part 2: Type BFOC/2,5 connector family
IEC 61754-4:2013	Fibre optic interconnecting devices and passive components - Fibre optic connector interfaces - Part 4: Type SC connector family
IEC 61754-4-100:2015	Fibre optic interconnecting devices and passive components - Fibre optic connector interfaces - Part 4-100: Type SC connector family - Simplified receptacle SC-PC connector interfaces
Directive 2011/65/EU (RoHS II)	Restriction of the Use of Certain Hazardous Substances in Electrical and Electronic Equipment — compliant. Applies within EU member states).
Directive (EU) 2015/863 (RoHS III)	Amending Directive 2011/65/EU to add four phthalates (DEHP, BBP, DBP, DIBP) to Annex II — compliant.
Directive 2008/98/EC (WFD)	Waste Framework Directive — compliant. Implemented in the UK through the Waste (England and Wales) Regulations 2011 (SI 2011 No. 988).
ECHA SCIP Database	Compliant; product does not contain SVHCs (Substances of Very High Concern) as defined under REACH Article 33(1). Submission obligations met under EU REACH and UK REACH.
Regulation (EU) 2019/1021 (POPs)	EU Regulation on Persistent Organic Pollutants —

This data sheet was generated at 6:11pm 25th November 2026 and is subject to change at any time.

	compliant. For Great Britain, compliance is aligned with the Persistent Organic Pollutants (Amendment) (EU Exit) Regulations 2020 (SI 2020 No. 1355).
UK SI 2012 No. 3032	The Restriction of the Use of Certain Hazardous Substances in Electrical and Electronic Equipment Regulations 2012 (UK RoHS) — compliant for Great Britain. Retained EU law, as amended by the Product Safety and Metrology (Amendment etc.) (EU Exit) Regulations 2019.

Part Code Table

Part Code	Description
203-400	**Excel Enbeam OM3 Fibre Optic Patch Lead Uniboot LC-LC Multimode 50/125 DX LS0H Aqua 0.5 m**
203-401	**Excel Enbeam OM3 Fibre Optic Patch Lead Uniboot LC-LC Multimode 50/125 DX LS0H Aqua 1 m**
203-402	**Excel Enbeam OM3 Fibre Optic Patch Lead Uniboot LC-LC Multimode 50/125 DX LS0H Aqua 2 m**
203-403	**Excel Enbeam OM3 Fibre Optic Patch Lead Uniboot LC-LC Multimode 50/125 DX LS0H Aqua 3 m**
203-405	**Excel Enbeam OM3 Fibre Optic Patch Lead Uniboot LC-LC Multimode 50/125 DX LS0H Aqua 5 m**
203-410	**Excel Enbeam OM3 Fibre Optic Patch Lead Uniboot LC-LC Multimode 50/125 DX LS0H Aqua 10 m**
203-415	**Excel Enbeam OM3 Fibre Optic Patch Lead Uniboot LC-LC Multimode 50/125 DX LS0H Aqua 15 m**
203-420	**Excel Enbeam OM3 Fibre Optic Patch Lead Uniboot LC-LC Multimode 50/125 DX LS0H Aqua 20 m**
204-400	**Excel Enbeam OM4 Fibre Optic Patch Lead Uniboot LC-LC Multimode 50/125 DX LS0H Violet 0.5 m**
204-401	**Excel Enbeam OM4 Fibre Optic Patch Lead Uniboot LC-LC Multimode 50/125 DX LS0H Violet 1 m**

This data sheet was generated at 6:11pm 25th November 2026 and is subject to change at any time.

sales@excel-networking.com
excel-networking.com

204-402	**Excel Enbeam OM4 Fibre Optic Patch Lead Uniboot LC-LC Multimode 50/125 DX LS0H Violet 2 m**
204-403	**Excel Enbeam OM4 Fibre Optic Patch Lead Uniboot LC-LC Multimode 50/125 DX LS0H Violet 3 m**
204-405	**Excel Enbeam OM4 Fibre Optic Patch Lead Uniboot LC-LC Multimode 50/125 DX LS0H Violet 5 m**
204-410	**Excel Enbeam OM4 Fibre Optic Patch Lead Uniboot LC-LC Multimode 50/125 DX LS0H Violet 10 m**
204-415	**Excel Enbeam OM4 Fibre Optic Patch Lead Uniboot LC-LC Multimode 50/125 DX LS0H Violet 15 m**
204-420	**Excel Enbeam OM4 Fibre Optic Patch Lead Uniboot LC-LC Multimode 50/125 DX LS0H Violet 20 m**

This data sheet was generated at 6:11pm 25th November 2026 and is subject to change at any time.