# Excel Enbeam OM4 Fibre Optic Patch Lead Uniboot LC-LC Multimode 50/125 DX LS0H Violet 5 m

**Part Code: 204-405**

sales@excel-networking.com
excel-networking.com



## Main Features

- / Available in OM3/OM4/OS2
- / Low Loss Connectors
- / Easy polarity change
- / 100% Optically Tested
- / Very small 2mm diameter cable
- / 25 Year system warranty

## Product Overview

Excel's range of LC Uniboot patch cords provide excellent performance in a compact design, using 2 mm round cable containing 2 x 600 micron diameter fibres, which are ideal in high density applications. They are available in a choice of OM3, OM4 or OS2 bend-insensitive fibre.

These patch cords are available in two versions - standard uniboot and pull-tab version. Both versions allow for easy polarity changing.

## Product Specifications



This data sheet was generated at 6:23pm 28th November 2026 and is subject to change at any time.

sales@excel-networking.com
excel-networking.com

| Feature | Values |
|---|---|
| Fibre type | **Multi mode 50/125** |
| Category | **OM4** |
| Number of Cores | **2** |
| Outer diameter sheath single fibre | **2 mm** |
| Cable type | **Duplex** |
| Length | **5 m** |
| Type of connector connection 1 | **LC (Uniboot)** |
| Type of connector connection 2 | **LC (Uniboot)** |
| Outer sheath colour | **Violet** |
| Strain relief boot | **Push-on** |
| Flame retardant according to IEC 60332-1-2 | **yes** |
| Low smoke (acc. IEC 61034-2) | **yes** |

## Cable specifications

| Features | OM3 | OM4 |
|---|---|---|
| Cable Construction | **Round Duplex** | **Round Duplex** |
| No. of Fibres | **2** | **2** |
| Cable Nominal Diamter | **2.0mm** | **2.0mm** |
| Colour | **Aqua** | **Heather Violet** |
| Strength members | **Aramid Yarn** | **Aramid Yarn** |
| Temperature range | **-20C to +70C** | **-20C to +70C** |
| Connector Material | **Composite** | **Composite** |
| Minimum bend radius (loaded) | **10 x cable diameter** | **10 x cable diameter** |



This data sheet was generated at 6:23pm 28th November 2026 and is subject to change at any time.

| | | |
|---|---|---|
| Connector Ferrule | **1.25mm Ceramic** | **1.25mm Ceramic** |
| Ferrule End Face | **PC Polish** | **PC Polish** |
| Connector Insertion Loss | **Max. 0.3dB** | **Max. 0.3dB** |

## Fibre specifications

| Features | Values |
|---|---|
| Fibre Attenuation @ 850nm | **Less than 3.5dB/km** |
| Fibre Attenuation @ 1300nm | **Less than 1.5dB/km** |
| Connector IL - Typical | **0.15dB** |
| Connector IL - Max | **0.3dB** |
| Connector Return Loss | **Less than -30dB** |

### Cross-section diagram

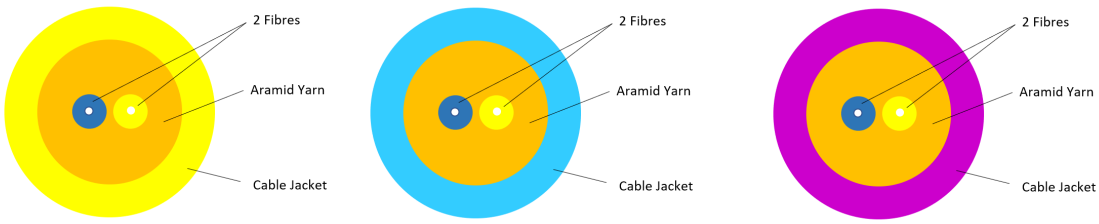



This data sheet was generated at 6:23pm 28th November 2026 and is subject to change at any time.

## Product drawing

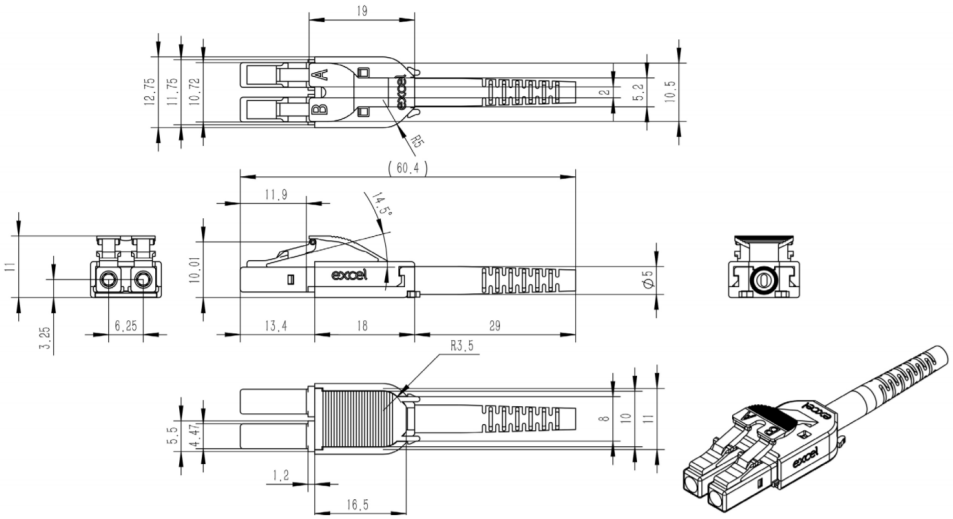


## Standards

| Applicable standard | Detail |
|---|---|
| BS EN 60332-1-2:2004+A11:2016 | Tests on electric and optical fibre cables under fire conditions - Test for vertical flame propagation for a single insulated wire or cable. Procedure for 1 kW pre-mixed flame |
| IEC 60793-1-1:2022 | Optical fibres - Part 1-1: Measurement methods and test procedures - General and guidance |
| IEC 60793-2:2015 | Optical fibres - Part 2: Product specifications - General |
| IEC 60793-2-10:2017 | Sectional specification for A1 multimode fibres |
| IEC 60793-1-20:2014 | Optical fibres - Part 1-20: Measurement methods and test procedures - Fibre geometry |
| IEC 60793-1-21:2001 | Optical fibres - Part 1-21: Measurement methods and test procedures - Coating geometry |
| IEC 60793-1-22:2001 | Optical fibres - Part 1-22: Measurement methods and test procedures - Length measurement |


This data sheet was generated at 6:23pm 28th November 2026 and is subject to change at any time.

| | |
|---|---|
| IEC 60793-1-30:2010 | Optical fibres - Part 1-30: Measurement methods and test procedures - Fibre proof test |
| IEC 60793-1-31:2010 | Optical fibres - Part 1-31: Measurement methods and test procedures - Tensile Strength |
| ITU G.651.1 | Characteristics of a 50/125 µm multimode graded index optical fibre cable for the optical access network |
| EN 50173-1:2018 | Information technology. Generic cabling systems - General requirements |
| EN 50173-2:2007 + A1:2010 | Information technology. Generic cabling systems - Office premises |
| IEC 61754-1:2013 | Fibre optic interconnecting devices and passive components - Fibre optic connector interfaces - Part 1: General and guidance |
| IEC 61754-2:1996 | Fibre optic connector interfaces - Part 2: Type BFOC/2,5 connector family |
| IEC 61754-4:2013 | Fibre optic interconnecting devices and passive components - Fibre optic connector interfaces - Part 4: Type SC connector family |
| IEC 61754-4-100:2015 | Fibre optic interconnecting devices and passive components - Fibre optic connector interfaces - Part 4-100: Type SC connector family - Simplified receptacle SC-PC connector interfaces |
| Directive 2011/65/EU (RoHS II) | Restriction of the Use of Certain Hazardous Substances in Electrical and Electronic Equipment — compliant. Applies within EU member states). |
| Directive (EU) 2015/863 (RoHS III) | Amending Directive 2011/65/EU to add four phthalates (DEHP, BBP, DBP, DIBP) to Annex II — compliant. |
| Directive 2008/98/EC (WFD) | Waste Framework Directive — compliant. Implemented in the UK through the Waste (England and Wales) Regulations 2011 (SI 2011 No. 988). |
| ECHA SCIP Database | Compliant; product does not contain SVHCs (Substances of Very High Concern) as defined under REACH Article 33(1). Submission obligations met under EU REACH and UK REACH. |
| Regulation (EU) 2019/1021 (POPs) | EU Regulation on Persistent Organic Pollutants — |


This data sheet was generated at 6:23pm 28th November 2026 and is subject to change at any time.

| | |
|---|---|
| | compliant. For Great Britain, compliance is aligned with the Persistent Organic Pollutants (Amendment) (EU Exit) Regulations 2020 (SI 2020 No. 1355). |
| UK SI 2012 No. 3032 | The Restriction of the Use of Certain Hazardous Substances in Electrical and Electronic Equipment Regulations 2012 (UK RoHS) — compliant for Great Britain. Retained EU law, as amended by the Product Safety and Metrology (Amendment etc.) (EU Exit) Regulations 2019. |

## Part Code Table

| Part Code | Description |
|---|---|
| 203-400 | **Excel Enbeam OM3 Fibre Optic Patch Lead Uniboot LC-LC Multimode 50/125 DX LS0H Aqua 0.5 m** |
| 203-401 | **Excel Enbeam OM3 Fibre Optic Patch Lead Uniboot LC-LC Multimode 50/125 DX LS0H Aqua 1 m** |
| 203-402 | **Excel Enbeam OM3 Fibre Optic Patch Lead Uniboot LC-LC Multimode 50/125 DX LS0H Aqua 2 m** |
| 203-403 | **Excel Enbeam OM3 Fibre Optic Patch Lead Uniboot LC-LC Multimode 50/125 DX LS0H Aqua 3 m** |
| 203-405 | **Excel Enbeam OM3 Fibre Optic Patch Lead Uniboot LC-LC Multimode 50/125 DX LS0H Aqua 5 m** |
| 203-410 | **Excel Enbeam OM3 Fibre Optic Patch Lead Uniboot LC-LC Multimode 50/125 DX LS0H Aqua 10 m** |
| 203-415 | **Excel Enbeam OM3 Fibre Optic Patch Lead Uniboot LC-LC Multimode 50/125 DX LS0H Aqua 15 m** |
| 203-420 | **Excel Enbeam OM3 Fibre Optic Patch Lead Uniboot LC-LC Multimode 50/125 DX LS0H Aqua 20 m** |
| 204-400 | **Excel Enbeam OM4 Fibre Optic Patch Lead Uniboot LC-LC Multimode 50/125 DX LS0H Violet 0.5 m** |
| 204-401 | **Excel Enbeam OM4 Fibre Optic Patch Lead Uniboot LC-LC Multimode 50/125 DX LS0H Violet 1 m** |


This data sheet was generated at 6:23pm 28th November 2026 and is subject to change at any time.

sales@excel-networking.com
excel-networking.com

| | |
|---|---|
| 204-402 | **Excel Enbeam OM4 Fibre Optic Patch Lead Uniboot LC-LC Multimode 50/125 DX LS0H Violet 2 m** |
| 204-403 | **Excel Enbeam OM4 Fibre Optic Patch Lead Uniboot LC-LC Multimode 50/125 DX LS0H Violet 3 m** |
| 204-405 | **Excel Enbeam OM4 Fibre Optic Patch Lead Uniboot LC-LC Multimode 50/125 DX LS0H Violet 5 m** |
| 204-410 | **Excel Enbeam OM4 Fibre Optic Patch Lead Uniboot LC-LC Multimode 50/125 DX LS0H Violet 10 m** |
| 204-415 | **Excel Enbeam OM4 Fibre Optic Patch Lead Uniboot LC-LC Multimode 50/125 DX LS0H Violet 15 m** |
| 204-420 | **Excel Enbeam OM4 Fibre Optic Patch Lead Uniboot LC-LC Multimode 50/125 DX LS0H Violet 20 m** |



This data sheet was generated at 6:23pm 28th November 2026 and is subject to change at any time.