Excel Encasa Internal Point of Entry Box Unloaded White

Part Code: 207-200

sales@excel-networking.com
excel-networking.com

CIBSE TM65 Embodied Carbon: 0.473 kg CO2e



Main Features

- / Multiple cable entry
- / Integrated cable management
- / 1 adaptor position
- / Slack cable storage
- / Splice holder
- / CIBSE TM65 Embodied Carbon: 0.473 kg CO2e

Product Overview

The Excel Encasa point of entry box has been designed to allow fibre to be passed through the enclosure allowing fibre to be distributed to apartments in multi dwellings applications. The enclosure has multiple cable entry points, cable storage area, holds up to 2 splice protectors and has a single position to house either a simplex SC or LC duplex adaptor.

Product Specifications

Feature	Values

This data sheet was generated at 8:01pm 28th November 2026 and is subject to change at any time.

Surface mounted	**yes**
Type of connector	**SC simplex LC duplex**
With couplers	**no**
Suitable for number of couplers	**1**
Suitable for type of fibre	**Multi mode/single mode**

Additional specifications

Features	Values
Splicing capacity	**2**
Material	**ABS**
Colour	**White**
Operating temperature	**-20 to +85 °C**

This data sheet was generated at 8:01pm 28th November 2026 and is subject to change at any time.

Product drawings

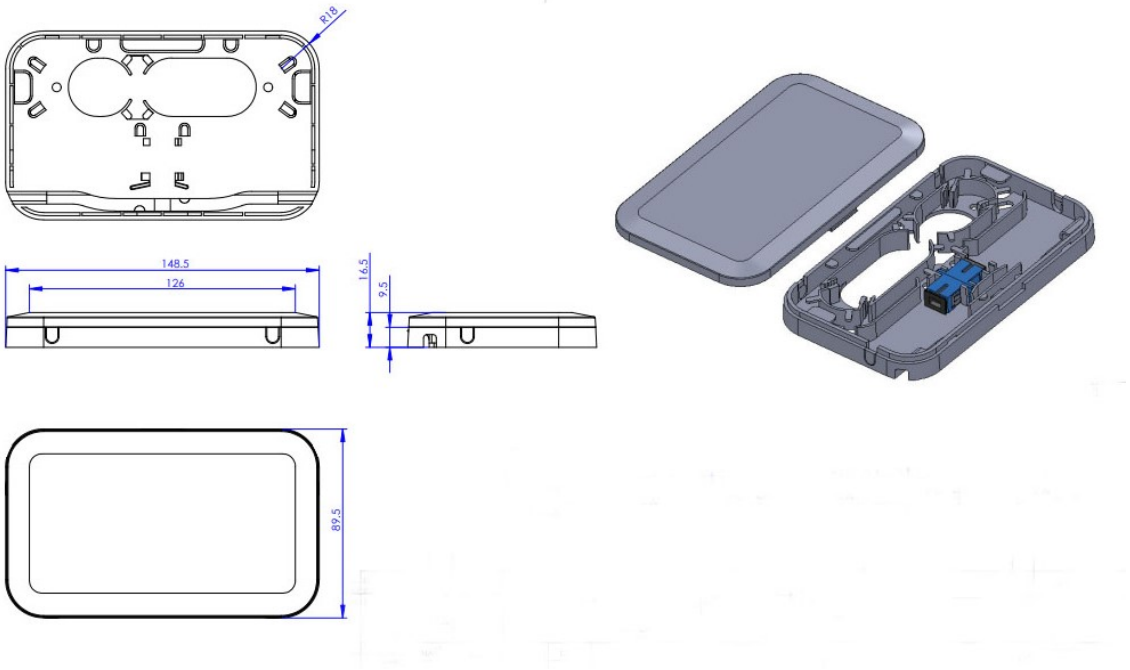

Standards

Applicable standard	Detail
IEC 61754-1:2013	Fibre optic interconnecting devices and passive components - Fibre optic connector interfaces - Part 1: General and guidance
ISO/IEC 11801-1:2017	Information technology - Generic cabling for customer premises: Part 1 General Requirements
EN 50173-1:2018	Information technology - Generic cabling systems - General requirements
UL-94-V-0	Burning stops within 10 seconds after two applications of ten seconds each of a flame to a test bar. NO flaming drips are allowed.
Directive 2011/65/EU (RoHS II)	Restriction of the Use of Certain Hazardous Substances in Electrical and Electronic Equipment — compliant. Applies

This data sheet was generated at 8:01pm 28th November 2026 and is subject to change at any time.

	within EU member states).
Directive (EU) 2015/863 (RoHS III)	Amending Directive 2011/65/EU to add four phthalates (DEHP, BBP, DBP, DIBP) to Annex II — compliant.
Directive 2008/98/EC (WFD)	Waste Framework Directive — compliant. Implemented in the UK through the Waste (England and Wales) Regulations 2011 (SI 2011 No. 988).
ECHA SCIP Database	Compliant; product does not contain SVHCs (Substances of Very High Concern) as defined under REACH Article 33(1). Submission obligations met under EU REACH and UK REACH.
Regulation (EU) 2019/1021 (POPs)	EU Regulation on Persistent Organic Pollutants — compliant. For Great Britain, compliance is aligned with the Persistent Organic Pollutants (Amendment) (EU Exit) Regulations 2020 (SI 2020 No. 1355).
UK SI 2012 No. 3032	The Restriction of the Use of Certain Hazardous Substances in Electrical and Electronic Equipment Regulations 2012 (UK RoHS) — compliant for Great Britain. Retained EU law, as amended by the Product Safety and Metrology (Amendment etc.) (EU Exit) Regulations 2019.

Included accessories

Accessories	Quantity
Splice protectors	**1**
Wall fixings	**1 Set**

Part Code Table

Part Code	Description
207-200	**Excel Encasa Internal Point of Entry Box Unloaded White**

This data sheet was generated at 8:01pm 28th November 2026 and is subject to change at any time.

sales@excel-networking.com
excel-networking.com

This data sheet was generated at 8:01pm 28th November 2026 and is subject to change at any time.