Excel Enbeam High Density 12 Port 24 Fibre LC OM4 Cassette Loaded with Duplex Adaptors

Part Code: 208-123

sales@excel-networking.com
excel-networking.com

CIBSE TM65 Embodied Carbon: 2.200 kg CO2e

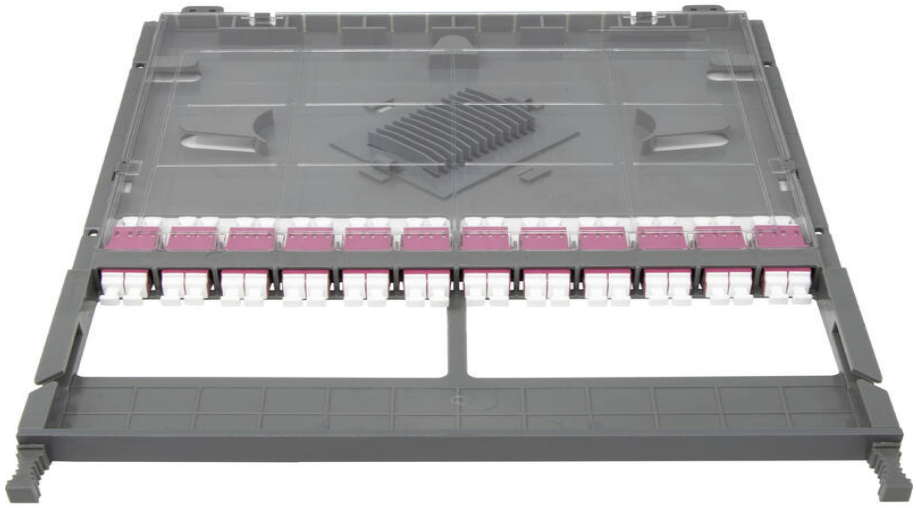

Main Features

- / High Density 24 fibre LC cassette
- / Can be spliced or direct terminated
- / OS2, OM3 and OM4 options
- / Complete with splice protectors
- / Pre-termination options
- / 25 Year system Wwrranty available

Product Overview

The Excel LC High-Density cassette is designed for the Excel HD 1U panel, which has a capacity for 6 cassettes, offering up to 144 fibres per 1U. A range of cassettes are offered and can be mixed and matched as required to offer a highly dense and flexible system for both LC and MTP connectivity.

The LC cassettes can be spliced, direct terminated or pre-terminated offering a truly plug-n-play solution. The cassettes can be supplied with or without pigtails. See the part number table below for all options. The pigtails (if supplied) are 2 x 12-colours and loaded to TIA 598 colour standard.

The cassettes can be inserted into the panel from the front and feature 2 physical stops, one installed and one for patching.

This data sheet was generated at 1:10pm 25th November 2026 and is subject to change at any time.

The panel also offers full and innovative patchcord management to the front and cable management to the rear.

Product Specifications

Feature	Values
Suitable for number of fibre cores	**24**
With coupling/adapter	**yes**
Type of connector external	**LC**
Type of connector interior	**LC**
Fibre type	**Multi mode**
Colour	**Grey**

Additional specifications

Features	Values
Operating Temprature	**-40 to +80 °C**
Capacity	**24 LC-Fibres per cassette**
Width	**212.8mm**
Height	**12.4mm**
Depth	**287.3mm**
Material Coating	**ABS UL94-V0**
Colour	**Grey**

This data sheet was generated at 1:10pm 25th November 2026 and is subject to change at any time.

Product drawing

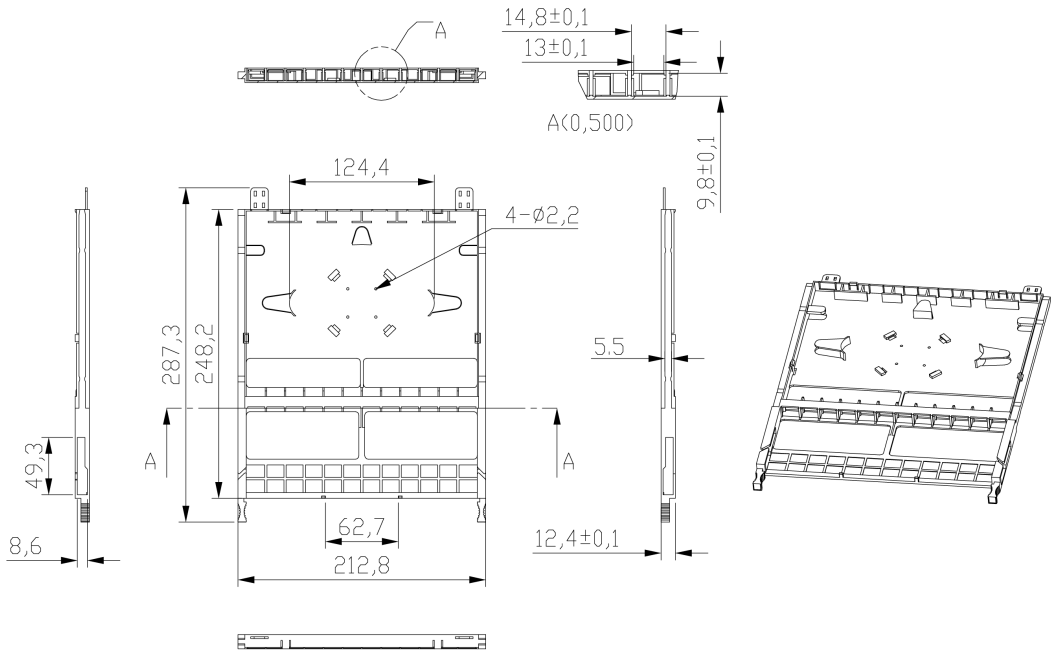

Standards

Applicable standard	Detail
Directive 2011/65/EU (RoHS II)	Restriction of the Use of Certain Hazardous Substances in Electrical and Electronic Equipment — compliant. Applies within EU member states).
Directive (EU) 2015/863 (RoHS III)	Amending Directive 2011/65/EU to add four phthalates (DEHP, BBP, DBP, DIBP) to Annex II — compliant.
IEC 61754-1:2013	Fibre optic interconnecting devices and passive components - Fibre optic connector interfaces - Part 1: General and guidance
Directive 2008/98/EC (WFD)	Waste Framework Directive — compliant. Implemented in the UK through the Waste (England and Wales) Regulations 2011 (SI 2011 No. 988).

This data sheet was generated at 1:10pm 25th November 2026 and is subject to change at any time.

ECHA SCIP Database	Compliant; product does not contain SVHCs (Substances of Very High Concern) as defined under REACH Article 33(1). Submission obligations met under EU REACH and UK REACH.
Regulation (EU) 2019/1021 (POPs)	EU Regulation on Persistent Organic Pollutants — compliant. For Great Britain, compliance is aligned with the Persistent Organic Pollutants (Amendment) (EU Exit) Regulations 2020 (SI 2020 No. 1355).
UK SI 2012 No. 3032	The Restriction of the Use of Certain Hazardous Substances in Electrical and Electronic Equipment Regulations 2012 (UK RoHS) — compliant for Great Britain. Retained EU law, as amended by the Product Safety and Metrology (Amendment etc.) (EU Exit) Regulations 2019.

Part Code Table

Part Code	Description
208-121	**Excel Enbeam High Density 12 Port 24 Fibre LC OS2 Cassette Loaded with Duplex Adaptors**
208-122	**Excel Enbeam High Density 12 Port 24 Fibre LC OM3 Cassette Loaded with Duplex Adaptors**
208-123	**Excel Enbeam High Density 12 Port 24 Fibre LC OM4 Cassette Loaded with Duplex Adaptors**
208-124	**Excel Enbeam High Density 12 Port 24 Fibre LC OS2 Cassette Loaded with Duplex Adaptors & Pigtails**
208-125	**Excel Enbeam High Density 12 Port 24 Fibre LC OM3 Cassette Loaded with Duplex Adaptors & Pigtails**
208-126	**Excel Enbeam High Density 12 Port 24 Fibre LC OM4 Cassette Loaded with Duplex Adaptors & Pigtails**

This data sheet was generated at 1:10pm 25th November 2026 and is subject to change at any time.