Excel Enbeam 24 Way Multimode OM3 Fibre Optic Panel 8 LC Duplex (16 Fibre) Aqua

Part Code: 233-462

sales@excel-networking.com
excel-networking.com



Main Features

/ Management and fixing kit included

/ Port identification numbers

/ Recessed adaptors

/ Upto 24 duplex adaptors per patch panel

/ Sliding drawer on ball bearing runners

/ Special configurations made to order

Product Overview

The Excel range of LC patch panels are sliding drawer "tray style" housings suitable for either direct termination or splicing of up to 48 when using LC duplex connections in a 1U space. Each panel is manufactured from a mix of 1 mm thick steel with a powder coated finish and a high-density polycarbonate sliding tray, offering a lightweight, strong durable unit.

To the front of the patch panel the specified number of duplex adaptors are loaded from left to right. Each panel utilises colour coded adaptors, beige, aqua and violet for multimode, blue for single mode and green for SM APC. Each duplex adaptor accommodates 2 terminated fibres.

This design delivers lower emissions and less reliance on mineral extraction, while achieving a 36% decrease in embedded carbon compared with the metal version. The lighter construction also minimises floor loading during installation and decreases the overall

This data sheet was generated at 11:51pm 27th November 2026 and is subject to change at any time.

cabinet weight, improving handling and installation efficiency.

Additional features include easier one-person installation, integrated knockouts, and rear entry points on both the left and right sides for improved cable access and flexibility.

Note that this panel accepts flanged and flangeless LC adaptors and can be assembled to order using a combination of adaptors, pigtails and splice cassettes - call to enquire.

Product Specifications

Feature	Values
Suitable for number of fibre cores	**48**
Suitable for number of module inserts	**24**
Loaded with number of couplings/adapters	**8**
With pigtails	**no**
Fibre type	**Multi mode 50/125**
Fibre class	**OM3**
APC-type	**no**
Type of connector external	**LC-Duplex**
Type of connector interior	**LC-Duplex**
Colour	**Black**
RAL-number	**9005**
Mounting method	**482.6 mm (19 inch) mounting**
Number of rack units (RU)	**1**
Height	**44 mm**
Width	**482 mm**
Depth	**219.5 mm**

This data sheet was generated at 11:52pm 27th November 2026 and is subject to change at any time.

Additional specifications

Feature	Value
Operating temprature	**-40 to +80 °C**
IP rating	**IP20**
Cable entry 20 mm	**2**
Cable entry 25 mm	**2**
Blown fibre entry	**8**
Material	**Colds rolled steel and polycarbonate**
Material thickness	**1 mm**
Material coating (metal)	**Powder coating**
Polycarbonate material thickness	**Verious**
RoHs compliant adaptor	**yes**
Designed in accordance with	**ISO/IEC 11801, IEC60304,IEC61754, TIA/EIA 568.D**

This data sheet was generated at 11:52pm 27th November 2026 and is subject to change at any time.

Product drawing

This data sheet was generated at 11:52pm 27th November 2026 and is subject to change at any time.

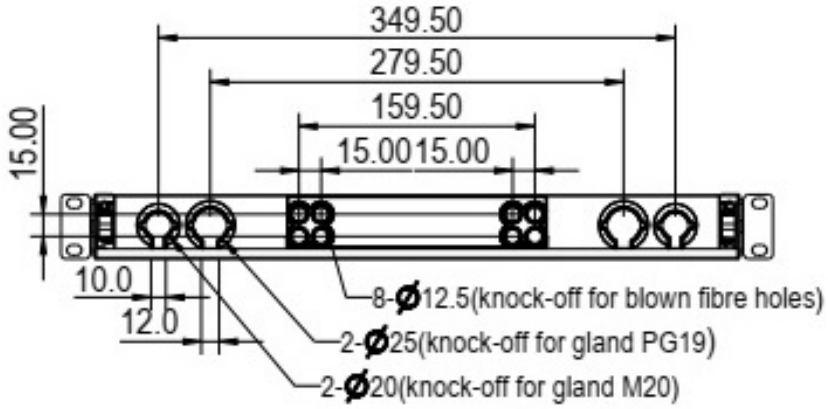

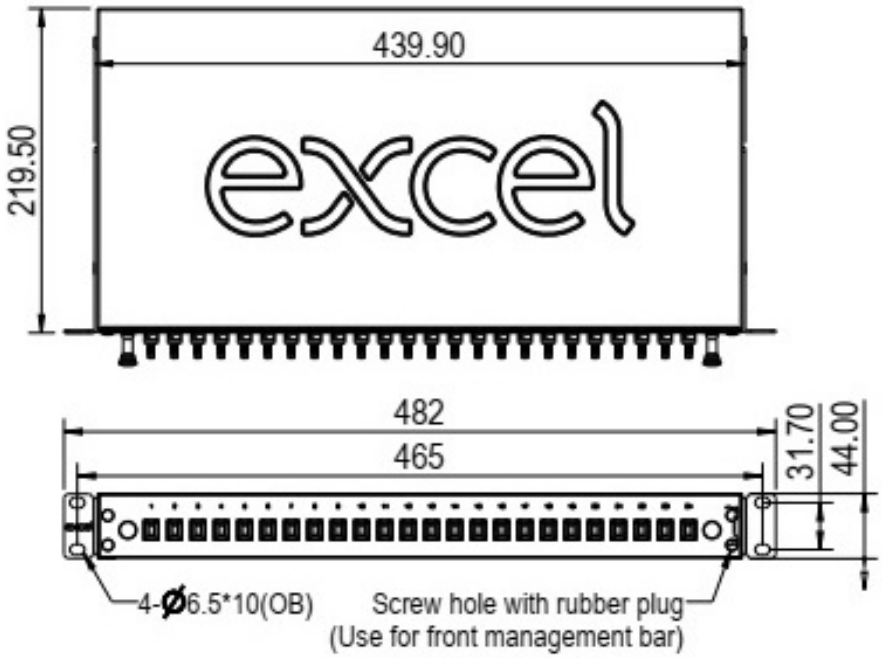



LC duplex adaptor
with dust caps

This data sheet was generated at 11:52pm 27th November 2026 and is subject to change at any time.

Included accessories

Accessories	Quantity
Cable gland (PG 13.5)	**1**
Cable gland (PG 19)	**1**
Nylon cable tie	**7**
24 position splice holder	**4**
Adjustable cable tie	**2**
Mounting twist tie	**4**
Cage nuts and screws	**(1-Pack)**
SC duplex blanks	**24**

Standards

Applicable standard	Detail
Directive 2011/65/EU (RoHS II)	Restriction of the Use of Certain Hazardous Substances in Electrical and Electronic Equipment — compliant. Applies within EU member states).
Directive (EU) 2015/863 (RoHS III)	Amending Directive 2011/65/EU to add four phthalates (DEHP, BBP, DBP, DIBP) to Annex II — compliant.
Directive 2008/98/EC (WFD)	Waste Framework Directive — compliant. Implemented in the UK through the Waste (England and Wales) Regulations 2011 (SI 2011 No. 988).
ECHA SCIP Database	Compliant; product does not contain SVHCs (Substances of Very High Concern) as defined under REACH Article 33(1). Submission obligations met under EU REACH and UK REACH.
Regulation (EU) 2019/1021 (POPs)	EU Regulation on Persistent Organic Pollutants — compliant. For Great Britain, compliance is aligned with the

This data sheet was generated at 11:52pm 27th November 2026 and is subject to change at any time.

	Persistent Organic Pollutants (Amendment) (EU Exit) Regulations 2020 (SI 2020 No. 1355).
UK SI 2012 No. 3032	The Restriction of the Use of Certain Hazardous Substances in Electrical and Electronic Equipment Regulations 2012 (UK RoHS) — compliant for Great Britain. Retained EU law, as amended by the Product Safety and Metrology (Amendment etc.) (EU Exit) Regulations 2019.

Part Code Table

Part Code	Description
233-460	**Excel Enbeam 24 Way Multimode OM3 Fibre Optic Panel 4 LC Duplex (8 Fibre) Aqua**
233-461	**Excel Enbeam 24 Way Multimode OM3 Fibre Optic Panel 6 LC Duplex (12 Fibre) Aqua**
233-462	**Excel Enbeam 24 Way Multimode OM3 Fibre Optic Panel 8 LC Duplex (16 Fibre) Aqua**
233-464	**Excel Enbeam 24 Way Multimode OM3 Fibre Optic Panel 12 LC Duplex (24 Fibre) Aqua**
233-466	**Excel Enbeam 24 Way Multimode OM3 Fibre Optic Panel 24 LC Duplex (48 Fibre) Aqua**
244-460	**Excel Enbeam 24 Way Multimode OM4 Fibre Optic Panel 4 LC Duplex (8 Fibre) Violet**
244-461	**Excel Enbeam 24 Way Multimode OM4 Fibre Optic Panel 6 LC Duplex (12 Fibre) Violet**
244-462	**Excel Enbeam 24 Way Multimode OM4 Fibre Optic Panel 8 LC Duplex (16 Fibre) Violet**
244-464	**Excel Enbeam 24 Way Multimode OM4 Fibre Optic Panel 12 LC Duplex (24 Fibre) Violet**
244-466	**Excel Enbeam 24 Way Multimode OM4 Fibre Optic Panel 24 LC Duplex (48 Fibre) Violet**

This data sheet was generated at 11:52pm 27th November 2026 and is subject to change at any time.

This data sheet was generated at 11:52pm 27th November 2026 and is subject to change at any time.