Excel VertiCab Universal Mount Network Cabinet 3U Front Mount + 2U Rear Mount WxD 500mm x 140mm...

Part Code: 350-752

sales@excel-networking.com
excel-networking.com

CIBSE TM65 Embodied Carbon: 57.918 kg CO2e



Main Features

- Compact design
- Lockable Lid
- Supplied with cage nuts and fixings
- Phosphate black finish
- 19" mounting profiles
- CIBSE TM65 Embodied Carbon: 57.918 kg CO2e

Product Overview

Excel VertiCab Universal Mount Network Cabinet 3U Front Mount + 2U Rear Mount WxD 500 mm x 140 mm Black, part of a huge range of Network Data Cabinets available from Mayflex. The Excel VertiCab offers a flexible solution for mounting equipment or patch panels, both copper and fibre, and a variety of positions.

This cabinet may be mounted on the Wall, on the Ceiling or in the Floor Void. The cabinet provides 3U of deep mounting and 2U of shallow mounting to accommodate various patch panels and equipment. The Excel VertiCab is ideal for use as a Consolidation Point, Small Active Equipment Housing or Local Active Equipment distribution point.

The Max depth of a switch on front profiles if rear profiles are both populated would be 200mm Max. The Max depth of a switch on front profiles if one rear profile is populated would be 240mm Max. The Max depth of a switch on front profile if rear profiles are not

This data sheet was generated at 9:03am 23rd November 2026 and is subject to change at any time.

populated would be 280mm Max.

Product Specifications

Feature	Values
Model	**Verticab**
Number of doors	**1**
Width	**500 mm**
Height	**475 mm**
Depth	**140 mm**
Modular spacing	**19 inch**
Number of rack units (RU)	**5**
With front door	**yes**
Material	**Metal**
Type of surface	**Phosphate Coating**
Colour	**Black**
RAL-number	**9004**

This data sheet was generated at 9:04am 23rd November 2026 and is subject to change at any time.

Excel VertiCab Universal Mount Network Cabinet 3U Front Mount + 2U Rear Mount WxD 500mm x 140mm...

Part Code: 350-752

sales@excel-networking.com
excel-networking.com

Product drawing

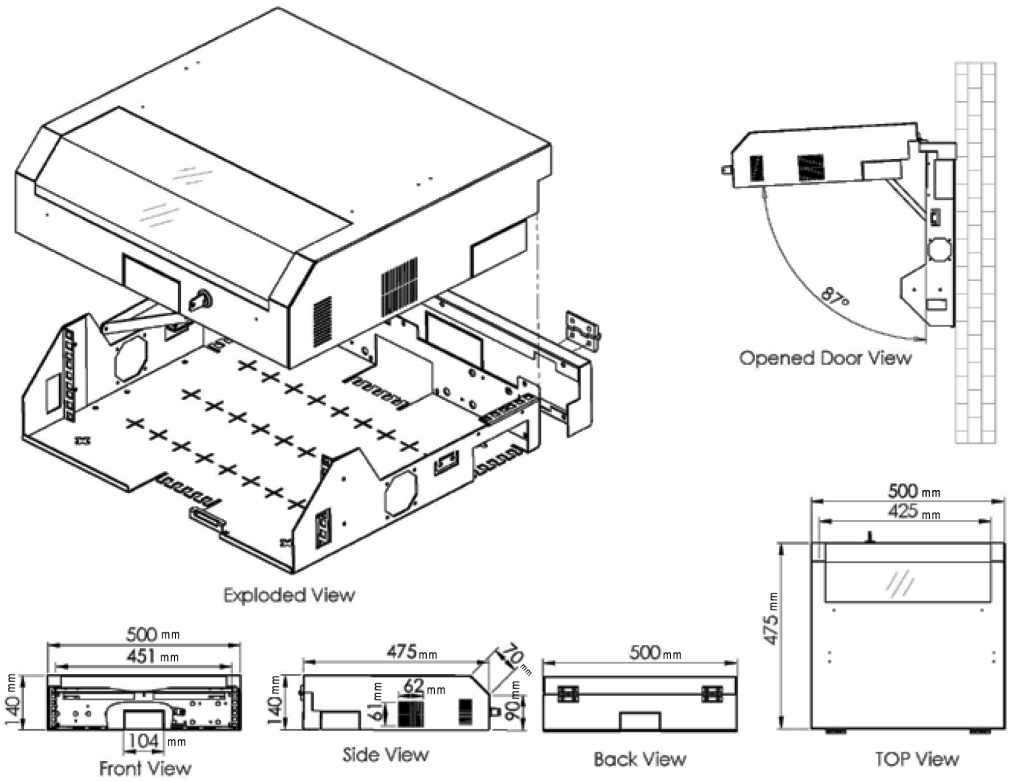

Standards

Applicable standard	Detail
EN 61587-1	Mechanical structures for electronic equipment. Tests for IEC 60917 and IEC 60297.
	Climatic, mechanical tests and safety aspects for cabinets, racks, subracks and chassis
EN61587-1/5.2.1	Static Mechanical Load Lifting
EN61587-1/5.2.2	Static Mechanical Load Stiffness
EN61587-1/5.3.1, EN61587-1/5.3.3,	Dynamic Mechanical Load Vibration and Shock, Impact

This data sheet was generated at 9:04am 23rd November 2026 and is subject to change at any time.

IEC60068-2-6, IEC60068-2-27	
EN61587-1/6.2	Earth Bond

Part Code Table

Part Code	Description
350-752	**Excel VertiCab Universal Mount Network Cabinet 3U Front Mount + 2U Rear Mount WxD 500mm x 140mm Black**

This data sheet was generated at 9:04am 23rd November 2026 and is subject to change at any time.