Excel SR 800 mm Wide Anti-Tilt Kit Black

Part Code: 544-508-BK

sales@excel-networking.com
excel-networking.com



Main Features

- For use with SR range
- Easy fixing
- Single plate supplied
- Available in Grey White and Black
- Fixings supplied
- 25 Year system warranty

Product Overview

The SR Anti-tilt Kit provides a greater stability to the SR racks.

The Anti-tilt Kit is fitted with the jacking feet in place.

Product Specifications

Feature	Values

This data sheet was generated at 8:38pm 24th November 2026 and is subject to change at any time.

Excel SR 800 mm Wide Anti-Tilt Kit Black

Part Code: 544-508-BK

sales@excel-networking.com
excel-networking.com

Model	**Base anti-tilt kit**
Material	**Steel**
Colour	**Black**
Width	**800 mm**

Product drawing

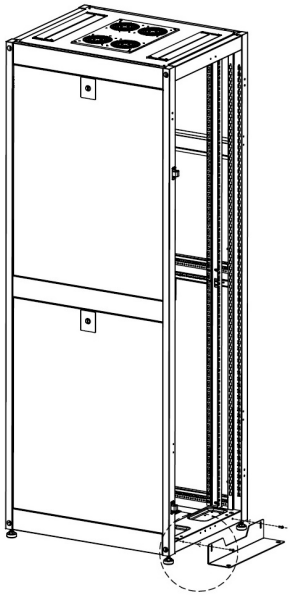



Anti tilt Fixing Kit

1X



M6X12
Screws

2X

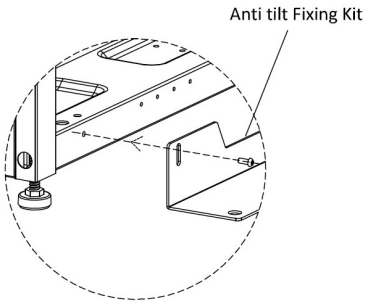

This data sheet was generated at 8:38pm 24th November 2026 and is subject to change at any time.

sales@excel-networking.com
excel-networking.com

Product drawings

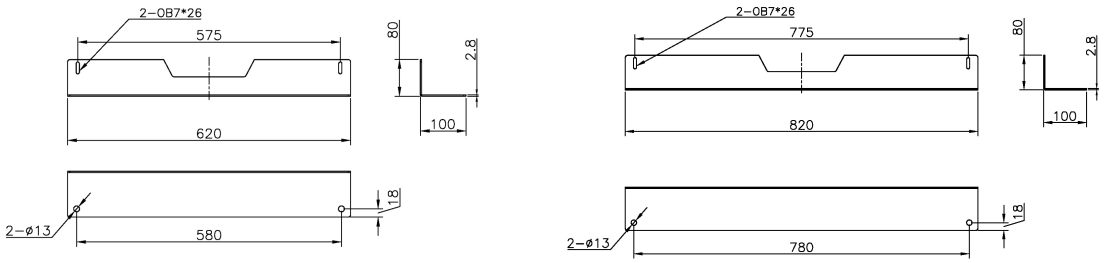

Part Code Table

Part Code	Description
544-506-BK	**Excel SR 600 mm Wide Anti-Tilt Kit Black**
544-506-GE	**Excel SR 600 mm Wide Anti-Tilt Kit Grey White**
544-508-BK	**Excel SR 800 mm Wide Anti-Tilt Kit Black**
544-508-GE	**Excel SR 800 mm Wide Anti-Tilt Kit Grey White**

This data sheet was generated at 8:38pm 24th November 2026 and is subject to change at any time.