Environ Plinth 800mm Wide x 1200mm Deep for SR Racks Grey White

Item Code: 544-982-GE

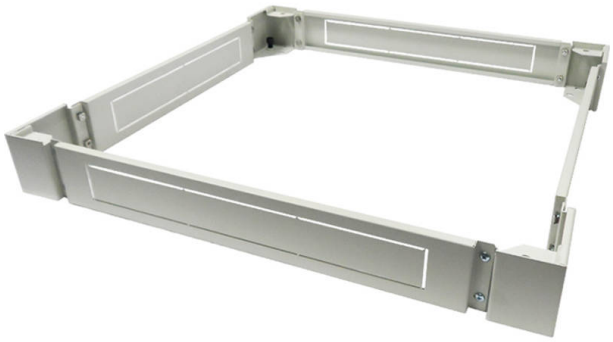

- Cable entry via blank plates on all sides
- Cable entry knockouts x 4
- Load Bearing
- Takes both Levelling Feet and Castors
- 25 years System Warranty

Product Overview

Available as an option to suit all sizes of Excel Environ Racks, the plinth increases the overall height by approximately 100mm and allows for easy cable access into the base.

The plinth is manufactured with removable sides to further aid access for cabling and levelling purposes.

Product Specifications

Feature	Values
Model	Complete base kit
Material	Steel
Colour	Grey White
Suitable for cable patch	yes
Width	800 mm
Height	100 mm
Depth	800 mm

Environ Plinth 800mm Wide x 1200mm Deep for SR Racks Grey White

Item Code: 544-982-GE

Product drawing

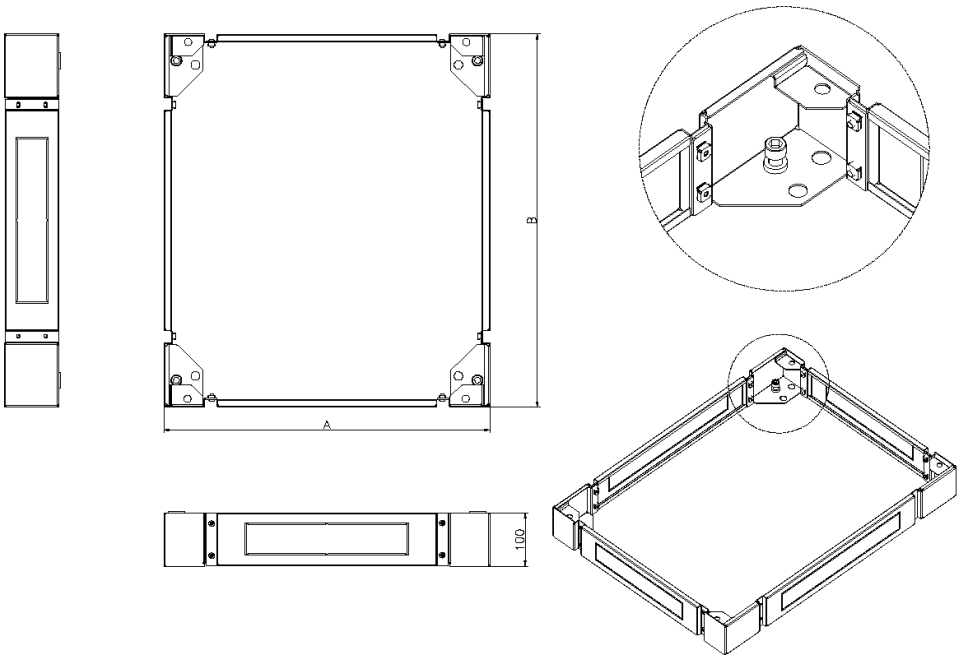

Standards

Applicable standard	Detail
RoHS-II/-III (2011/65/EU & 2015/863): 2023	Our products, demonstrate full adherence to the regulatory stipulations of the EU Directive 2011/65/EU (RoHS-II) and its corresponding delegated directive 2015/863 (RoHS-III).
WFD: 2023	Compliant to Waste Framework Directive
SCIP: 2023	Compliant - Does Not Contain Substances of Concern In articles as such or in complex objects (Products)
POPs (EU) No 2019/1021	EU Regulation for the restriction of Persistent Organic Pollutants.

Part Number Table

Part Number	Description
544-960-BK	Environ Plinth 600mm Wide x 1000mm Deep for SR Racks Black
544-962-BK	Environ Plinth 600mm Wide x 1200mm Deep for SR Racks Black

544-966-BK	Environ Plinth 600mm Wide x 600mm Deep for SR Racks Black
544-968-BK	Environ Plinth 600mm Wide x 800mm Deep for SR Racks Black
544-980-BK	Environ Plinth 800mm Wide x 1000mm Deep for SR Racks Black
544-982-BK	Environ Plinth 800mm Wide x 1200mm Deep for SR Racks Black
544-982-GE	Environ Plinth 800mm Wide x 1200mm Deep for SR Racks Grey White

Excel is a world class premium performing end to end infrastructure solution designed, Manufactured, supported and delivered without compromise.

Contact us at sales@excel-networking.com

E&OE. Excel is a registered trade name of Mayflex Holdings Ltd.