Excel WR400 Wall Rack Network Data Cabinet 9U 400 mm Deep Black

Part Code: WB9.4SGB

sales@excel-networking.com
excel-networking.com

Main Features

- Choice of depths available (400 mm, 500 mm, 600 mm)
- Quick release doors and side panel
- Removable cable entry panel in top and base
- Steel framed safety glass front door IK08
- Adjustable front and rear 19'' mounting profiles
- Options for jacking feet or castors

Product Overview

The Excel Environ WR400 wall rack network cabinet, 9U, width x depth 570 mm x 400 mm, black, is part of a large range of network data cabinets available from Mayflex. The Excel Environ WR is a range of wall-mounted, 570 mm wide racks designed for the installation of both cabling and equipment. These wall boxes now have options for jacking feet and castors in the base of the unit.

The WR series of wall racks is available in depths of 400 mm, 500 mm, and 600 mm, and is suitable for multiple applications, including local area networking (LAN) cabling and hardware, and the housing of security, audio, and visual equipment.

This data sheet was generated at 7:45pm 25th October 2026 and is subject to change at any time.

Excel WR400 Wall Rack Network Data Cabinet 9U 400 mm Deep Black

Part Code: WB9.4SGB

sales@excel-networking.com
excel-networking.com

Product Specifications

Feature	Values
Mounting Profile	**Front and rear**
Model	**With permanent frame**
Type of profile rail	**L-shaped**
Number of doors	**1**
Type of ventilation	**Passive**
Width	**570 mm**
Height	**501 mm**
Depth	**400 mm**
Modular spacing	**19 inch**
Number of rack units (RU)	**9**
Max. load capacity	**60 kg**
With roof plate	**yes**
With earthing	**no**
With front door	**yes**
Side panels included	**yes**
Flat-packed	**no**
Material	**Steel**
Type of surface	**Powder coated**
Colour	**Black**
RAL-number	**9004**
IP-rating	**IP20**

This data sheet was generated at 7:45pm 25th October 2026 and is subject to change at any time.

sales@excel-networking.com
excel-networking.com

Additional specifications

Feature	Value
Frame	**1.20 mm**
Top cover and fan entry plate	**1.20 mm**
19" mounting angles	**1.50 mm**
Side panels	**1.20 mm**
Front door frame	**1.20 mm**
Front door glass	**5.00 mm**
Cable entry knock out (Roof & Base)	**230 mm x 45 mm**

This data sheet was generated at 7:45pm 25th October 2026 and is subject to change at any time.

Product drawing

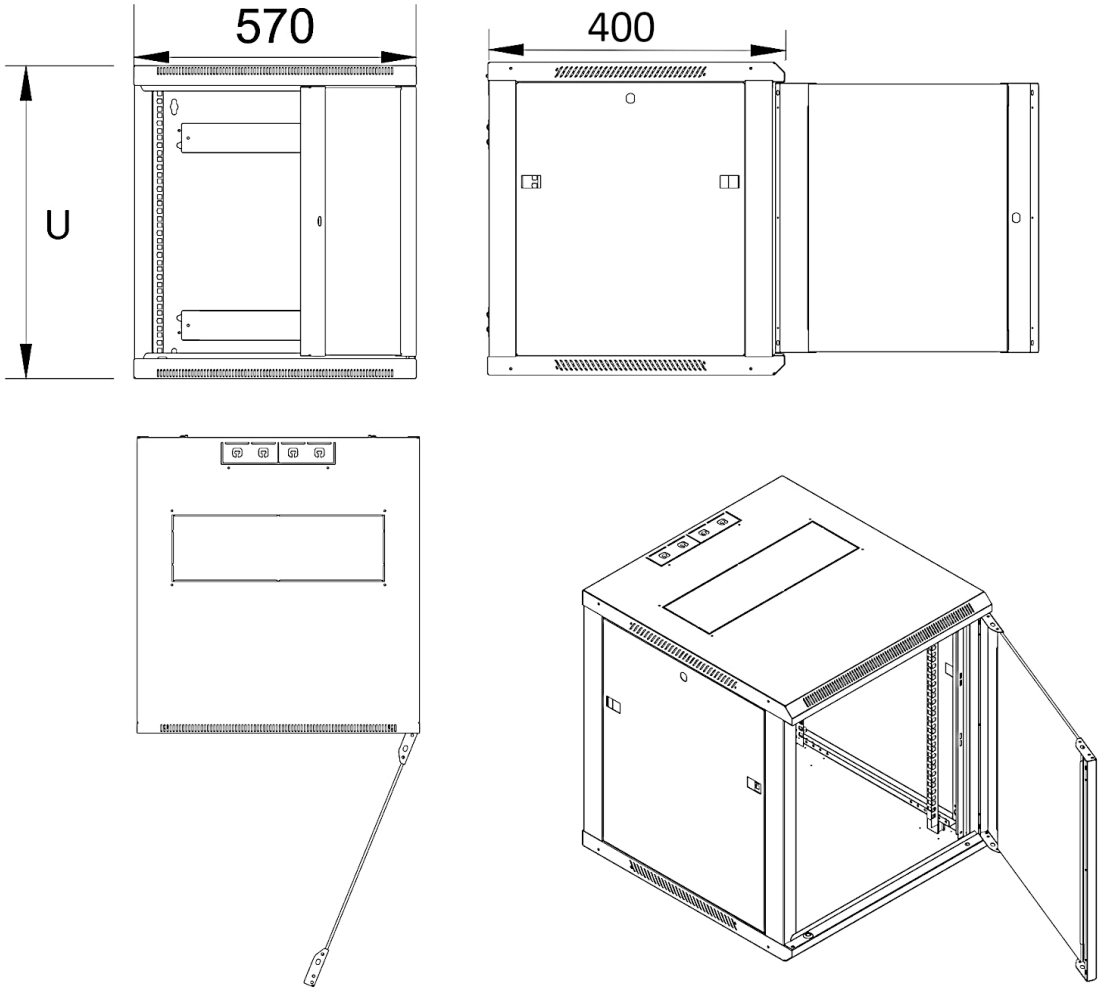

This data sheet was generated at 7:45pm 25th October 2026 and is subject to change at any time.

sales@excel-networking.com
excel-networking.com

Exploded view

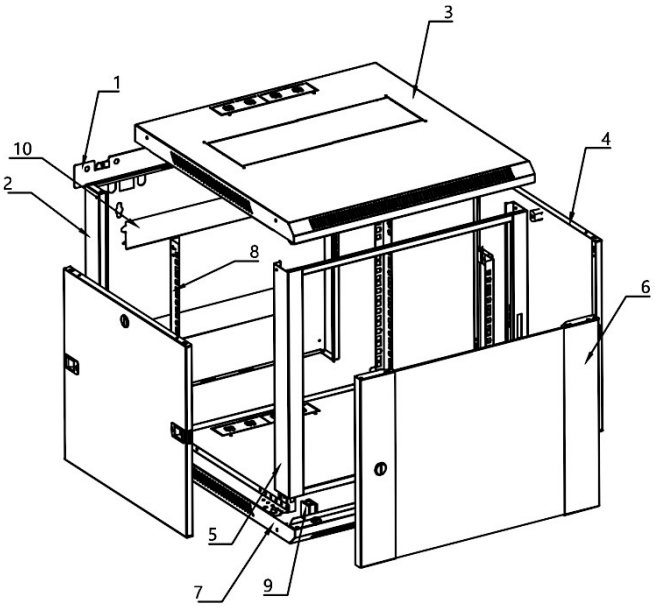

1) Mounting Bracket
2) Back Panel
3) Roof Panel
4) Side Panel
5) Front Post Frame
6) Front Door
7) Bottom Panel
8) 19" Mounting Rails
9) Bottom support block
10) Cable Covers x 2

Profile Positions

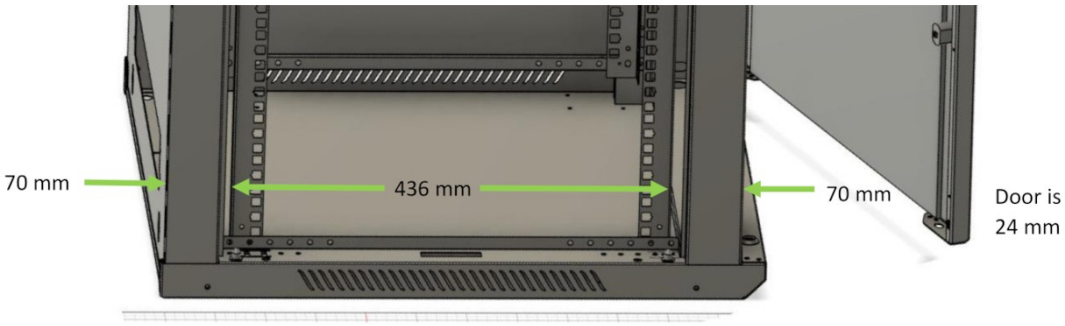

600mm Wall Box, pitch between profiles is **436mm is default pitch**, maximum is 456mm.

500mm Wall Box, pitch between profiles is **336mm is default pitch**, maximum is 356mm

400mm Wall Box, pitch between profiles is **236mm in default pitch**, maximum is 256mm

On 600mm Deep wall box, if rear profiles are moved forward by one position, that will give correct pitch from front profile to side holes which is 386mm, can use 542-021 or 542-026.

500mm Deep wall Boxes will not accept the 400mm Cantilever Shelf, use 542-022 fixed shelf.

For 400mm Deep Wall Boxes, only option is the small shelf 542-020.

This data sheet was generated at 7:45pm 25th October 2026 and is subject to change at any time.

Excel WR400 Wall Rack Network Data Cabinet 9U 400 mm Deep Black

Part Code: WB9.4SGB

sales@excel-networking.com
excel-networking.com

Product images

Quality Glass Door with Lock

Quick Release Side Panels

Mounting Bracket and cable Entry

19" Profiles front and back

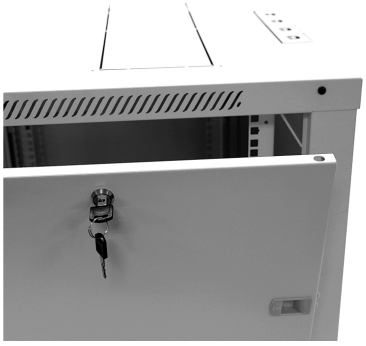

Side Panels Locakble with key

Roof Fan Tray opening and cable entry

Quality Finished Wall Box fully painted

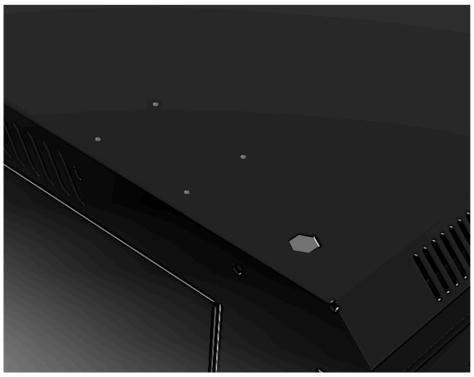

Mounting holes in base for jacking feet or castors

This data sheet was generated at 7:45pm 25th October 2026 and is subject to change at any time.

sales@excel-networking.com
excel-networking.com

Standards

Standard	Detail
BS EN 60297-3-100:2009	Mechanical structures for electronic equipment. Dimensions of mechanical structures of the 482,6 mm (19 in) series. Basic dimensions of front panels, subracks, chassis, racks and cabinets
BS 3193:2008	Specification for thermally toughened glass panels for use in domestic appliances
IEC 62262: 2002	Degrees of protection provided by enclosures for electrical equipment against external mechanical impacts (IK code)
Directive 2011/65/EU (RoHS II)	Restriction of the Use of Certain Hazardous Substances in Electrical and Electronic Equipment — compliant. Applies within EU member states).
Directive (EU) 2015/863 (RoHS III)	Amending Directive 2011/65/EU to add four phthalates (DEHP, BBP, DBP, DIBP) to Annex II — compliant.
Directive 2008/98/EC (WFD)	Waste Framework Directive — compliant. Implemented in the UK through the Waste (England and Wales) Regulations 2011 (SI 2011 No. 988).
ECHA SCIP Database	Compliant; product does not contain SVHCs (Substances of Very High Concern) as defined under REACH Article 33(1). Submission obligations met under EU REACH and UK REACH.
Regulation (EU) 2019/1021 (POPs)	EU Regulation on Persistent Organic Pollutants — compliant. For Great Britain, compliance is aligned with the Persistent Organic Pollutants (Amendment) (EU Exit) Regulations 2020 (SI 2020 No. 1355).
UK SI 2012 No. 3032	The Restriction of the Use of Certain Hazardous Substances in Electrical and Electronic Equipment Regulations 2012 (UK RoHS) — compliant for Great Britain. Retained EU law, as amended by the Product Safety and Metrology (Amendment etc.) (EU Exit) Regulations 2019.

This data sheet was generated at 7:45pm 25th October 2026 and is subject to change at any time.

sales@excel-networking.com
excel-networking.com

Part Code Table

Part Code	Description
WB12.4SGB	**Excel WR400 Wall Rack Network Data Cabinet 12U 400 mm Deep Black**
WB6.4SG	**Excel WR400 Wall Rack Network Data Cabinet 6U 400 mm Deep Grey**
WB6.4SGB	**Excel WR400 Wall Rack Network Data Cabinet 6U 400 mm Deep Black**
WB9.4SGB	**Excel WR400 Wall Rack Network Data Cabinet 9U 400 mm Deep Black**
WBFP12.4SGB	**Excel WR400 Flat Packed Wall Rack Network Cabinet 12U 400 mm Deep Black**
WBFP6.4SG	**Excel WR400 Flat Packed Wall Rack Network Cabinet 6U 400 mm Deep Grey**
WBFP6.4SGB	**Excel WR400 Flat Packed Wall Rack Network Cabinet 6U 400 mm Deep Black**
WBFP9.4SGB	**Excel WR400 Flat Packed Wall Rack Network Cabinet 9U 400 mm Deep Black**

This data sheet was generated at 7:45pm 25th October 2026 and is subject to change at any time.